BONENG

BE Bucket Elevator Gearbox

Modified date 07/2019
Selection Sample C05.0024–EN

Boneng Transmission

www.motiontech.com.au

Boneng Transmission More products: drive / motor / gearmotor / gearbox, etc.

Browse: www.boneng.com

Contents

1 Overview

Boneng gearboxes win wide appreciation of domestic and foreign customers with high-quality service and stable quality.The gearbox can be applied in driving mechanisms of belt conveyor, trolley conveyor, scraper conveyor, bucket conveyor, trolley conveyor, screw conveyor, roller conveyor, vibration conveyor and various kinds of conveyors We have obtained apparent achievements in cement in cement, port, mine, metallurgy, construction and chemical industries

BE series gearbox is a gearbox specially designed according to application situation and transmission characteristics of bucket conveyer. It is first-choice mating products for domestic and foreign bucket elevator manufacturers. We have made good achievements in bucket elevator industry. BE series gearbox has the following characteristics:

◆Main transmission and auxiliary transmission are of integrated design, the structure is compact. Main and auxiliary driving can be automatically switched with electric control Remote control doesnt need extra manual operation which is convenient for installation and debugging of users.

◆Auxiliary transmission can satisfy customers' requirements during maintenance. (But maintenance can only be done under empty loading(vacum up equipment material storage.

◆Main gearbox is equipped with back stop device. It can prevent reverse rotation when ine device stops or has faults.

◆Main gearbox is 3-stage or 4-stage transmission, reduction ratio range is 16-400, we can provide gear box with larger ratio according to customer requirements.

◆We can apply footing or axial-installing structure to install and equip rain-proof cover, protection cover, displacement-proof end plate and other auxiliaries according to actual application situations.

◆We apply high-quality imported backstop and overrun clutch, the volume is small, safety coefficient is high.

◆Modular design, international production, delivery is more rapid and convenient.

⚠ Note: 1. Main gearbox and auxiliary gearbox, the internal part of clutch flange should be filled with enough lubrication oil. You can only start the gearbox when filling enough lubrication oil

2. If not marked, the dimension unit in sample is millimeter(mm)

2 Product Function Mark

 Oil glass  Breather  Oil filler  Oil drain

3 Type Designation

BE 3 12 H S B - C50 - CW + UF21

Series

Number of Stages
3 –stage/ 4 –stage

Size
04–18

Mounting Mode
H=Horizontal mounting(with auxiliary gearmotor)
D=Horizontal mounting(without auxiliary gearmotor)

Output Shaft Mode
S=Solid shaft with parallel key
H=Hollow shaft with parallel key
D=Hollow shaft with shrink disc

Shaft Assembly Code
A/B/C/D

Nominal Ratio Code

Rotation Direction of Output Shaft
CW/CCW

With Cooling Fan

For other auxilaries,please contact us

4 Mounting Mode

Horizontal mounting			
BE3..H (iN 16~90)	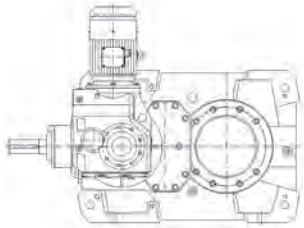 BE3..HS	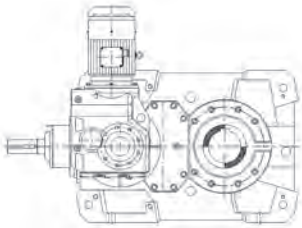 BE3..HH	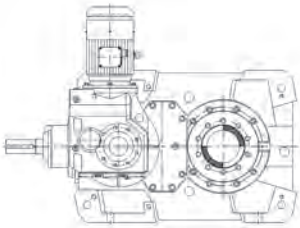 BE3..HD
BE3..D (iN 16~90)	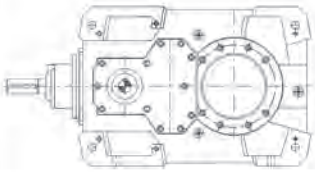 BE3..DS	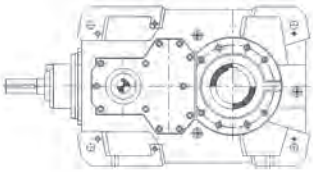 BE3..DH	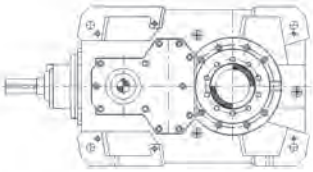 BE3..DD
BE4..H (iN 100~400)	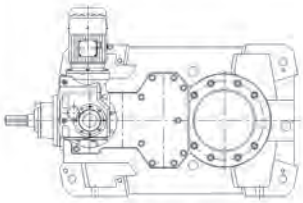 BE4..HS	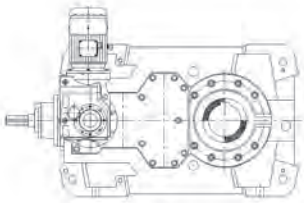 BE4..HH	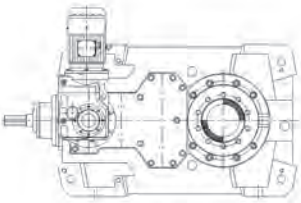 BE4..HD
BE4..D (iN 100~400)	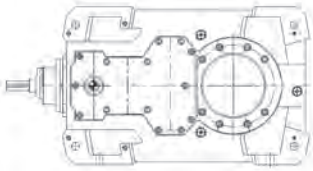 BE4..DS	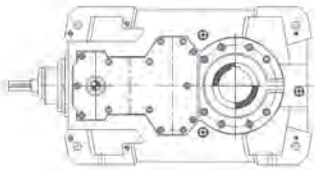 BE4..DH	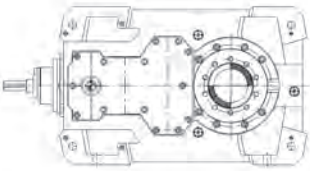 BE4..DD

5 Selection

Serial NO.	Desccription	Codes	Parameter Calculation
1	Driven machine factor	f_1	See Page 5 f1 table
2	Prime mover factor	f_2	Prime mover factor: f_2 Electric motors, hydraulic motors, steam turbines: 1.0 4 – 6 cylinders Piston engines Periodic variation 1 : 100 to 1 : 200: 1.25 Piston engines 1 – 3 cylinders cyclic variation up to 1 : 100: 1.5
3	Gear unit reliability factor	SF	See P5 SF table
4	Transmission Efficiency	η	3-stage:94%;4-stage:92%
5	Calculation of ratio	i	$i=n_1/n_2$
6	Input speed	n_1	≤1800rpm Consult us if higher speed is required.
7	Calculate the input power of the gear unit on basis of the torque and power required by driven machine	P1	$P_1=T_2 \cdot n_1/(9550 \cdot i \cdot \eta)$ or $P_1=P_2/\eta$
8	Deter mination of gear unit type referring to the table of transmission capacity	T2N、P1N	$T_{2N} \geq T_2 \cdot f_1 \cdot f_2 \cdot S_F$ 或 $P_{1N} \geq P_1 \cdot f_1 \cdot f_2 \cdot S_F$
9	Determine output mode		Output mode & mounting position
10	Check for peak torque	TA	$P_{1N} \geq T_A \cdot n_1 \cdot f_3/9550$
11	Determination of lubrication methods and lubricants		Horizontal Installation Optional Lubrication Methods: 1) Splash Lubrication 2) Forced Lubrication Shaft-end pump Lubrication Motor pump Lubrication User-supplied oil station Lubrication
12	Confirmed Cooling method		1) Adequate for gear units without auxiliary cooling device, if: $P_1 \leq P_{GA} \times f_4 \times f_8$ 2) Adequate for gear units with fan cooling, if: $P_1 \leq P_{GB} \times f_4 \times f_8$

f3	Peaks load times per hour			
	1–5	6–30	31–100	> 100
Unidirectional load	0.5	0.65	0.7	0.75
Alternating Load	0.7	0.95	1.10	1.25

* peak torque:maximum load torque,means maximum torque caused by starting,braking or maximum pulsating load.(Peak torque is maximum torque during starting or braking under common conditions.)

6 Service Factors

Factor for driven machine									f1
Driven machine		Daily running time with coad (hour/day)			Driven machine	Daily running time with coad (hour/day)		
		≤ 0.5	> 0.5–10	> 10		≤ 0.5	> 0.5–10	> 10
Bucket elevator		/	1.4	1.5	Scraper conveyor	/	1.2	1.5
Belt conveyor	≤ 150KW	1.0	1.2	1.3	Screw conveyor	/	1.2	1.5
					Hawling winch	1.4	1.6	1.8
	≥ 150KW	1.1	1.3	1.4	Winch	/	1.5	1.8

Reliability factor for gear unit		SF
For common machine when gear unit breaks down, only single machine shuts down. Components are easy to change with minor loss.	For important machines,when gear unit breaks down,the production line or the whole plant may shut down,the loss is big.	For high reality requirements, when gear unit breaks down, there maybe severe production problems,thus large economic loss and life accidents maybe caused.
1.0 ≤ SF ≤ 1.3	1.3<SF ≤ 1.5	1.5<SF

Ambient temperature factor					f4
Without auxiliary cooling or with fan cooling					
Ambient temperature	Operating cycle per hour (ED) in %				
	100	80	60	40	20
10 ℃	1.11	1.31	1.60	2.14	3.64
20 ℃	1.00	1.18	1.44	1.93	3.28
30 ℃	0.88	1.04	1.27	1.70	2.89
40 ℃	0.75	0.89	1.08	1.45	2.46
50 ℃	0.63	0.74	0.91	1.22	2.07

⚠ Note:
Operating cricle ED:ED= $\frac{tf}{tf+tr} \cdot 100\%$ tf: Operating time with load
tr: Stop time

Oil supply factor for gear units	f8
Splash Lubrication	1.0
Forced Lubrication	1.05

7 Auxiliary Gear motor Parameters

Type BE304H-318H							
Size	Gearmotor	Nominal ratio	Actual ratio	Motor power (kW)	Main ratio	Output ratation speed n3(r/min)	Rated output torque T3(kN.m)
BE304	KE47	30.9	31.43	1.1	16-25	3.7	2.9
					28-90	2.1	5.2
BE305	KE67	30.9	30.96	2.2	16-25	3.9	4.7
					28-90	2.2	8.6
BE306	KE67	30.9	30.96	2.2	16-25	3.8	5.0
					28-90	2.1	8.9
BE307	KE77	30.9	30.9	4	16-25	3.8	9.3
					28-90	2.1	17.1
BE308	KE77	30.9	30.9	4	16-25	3.8	9.3
					28-90	2.1	17.0
BE309	KE77	35.7	36.5	5.5	16-25	3.2	15.7
					28-90	1.8	27.1
BE310	KE77	35.7	36.5	5.5	16-25	3.2	15.5
					28-90	1.9	26.8
BE311	KE87	27.9	27.9	11	16-25	4.2	24.9
					28-90	2.3	44.7
BE312	KE87	27.9	27.9	11	16-25	4.2	25.9
					28-90	2.3	46.5
BE313	KE97	27.9	27.87	18.5	16-25	4.4	40.5
					28-90	2.4	74.6
BE314	KE97	27.9	27.87	18.5	16-25	4.4	40.5
					28-90	2.4	74.7
BE315	KE107	27.9	27.7	30	16-25	4.3	66.8
					28-90	2.4	119.4
BE316	KE107	27.9	27.7	30	16-25	4.3	66.8
					28-90	2.4	119.4
BE317	KE127	27.9	27.67	37	16-22.4	4.7	74.9
					25-80	2.7	133.2
BE318	KE127	27.9	27.67	37	16-25	3.9	89.8
					28-90	2.2	159.8

Type BE405H-418H							
Size	Gearmotor	Nominal ratio	Actual ratio	Motor power (kW)	Main ratio	Output ratation speed n3(r/min)	Rated output torque T3(kN.m)
BE405	KE37	9.8	9.93	1.5	100-112	2.6	4.9
					125-400	1.5	8.6
BE406	KE37	9.8	9.93	1.5	100-112	2.5	5.1
					125-400	1.4	8.9
BE407	KE47	12.5	12.42	2.2	100-112	2.0	9.3
					125-400	1.1	16.2
BE408	KE47	12.5	12.42	2.2	100-112	2.1	9.0
					125-400	1.2	16.0
BE409	KE67	8.1	8.14	5.5	100	3.4	13.8
					112-400	1.8	25.7
BE410	KE67	8.1	8.14	5.5	100	3.4	13.6
					112-400	1.8	25.7
BE411	KE67	14.3	14.42	5.5	100-112	1.8	25.1
					125-400	1.0	45.5
BE412	KE67	14.3	14.42	5.5	100-112	1.8	25.2
					125-400	1.0	45.5
BE413	KE77	14.3	14.4	11	100-112	1.8	50.3
					125-400	1.1	87.2
BE414	KE77	14.3	14.4	11	100-112	1.8	50.3
					125-400	1.1	87.2
BE415	KE87	14.3	14.1	15	100-112	1.9	66.7
					125-400	1.1	119.5
BE416	KE87	14.3	14.1	15	100-112	1.9	66.6
					125-400	1.1	119.4
BE417	KE87	14.3	14.1	18.5	90-100	2.1	73.9
					112-355	1.2	132.5
BE418	KE87	14.3	14.1	18.5	100-112	1.8	85.4
					125-400	1.0	152.9

8 Key to Symbols

Code	Instruction	Unit
i	Actual ratio	/
i_N	Nominal ratio	
i_{ex}	Accurate ratio	
Code	Speed Ratio Code	
T_{2n}	Rated output torque	N · m
T_A	Peak torque	
T_3	Auxiliary drive rated output torque	
P_{1N}	Rated input power for gearbox	kW
P_{GA}	Rated thermal capacity for gearbox without cooling devices	
P_{GB}	Rated thermal capacity for gearbox with cooling fans	
P_1	Input power	
P2	Application power for driver machine	
P_m	Motor Power	
f_1	Driven machine factor	/
f_2	Prime mover factor	
f_3	Peak load factor	
f_4	Ambient temperature factor	
f_8	Oil supply factor for gearbox	
S_F	Reliability factor for gearbox	
n_1	Input speed	r/min
n_{2N}	Nominal output speed	
n_2	Output speed	
n_3	Output shaft speed when auxiliary device is running	

9 Selection Example

Known Criterias:

Prime motor:

Motor Power: P_m=132KW

Motor Speed: n_1=1450rpm

Maximum starting torque: T_A=1395N・m

Driven machine (working machine):

Machine name: Bucket Elevator

Machine speed: n_2=29rpm

Lifting power: P_2=100KW

service duration: 12h/day

Operating circle per hour: 100%

Ambient temperature: 40℃

Gear units:

BE series gearbox

Shaft amangement:B

Output shaft:

Hollow output shaft with shrink disk connection

Rotating direction of out put shaft:

CW (Facing output shaft, CW rotating)

Selection steps:

1.Calculate ratio:

$i=n_1/n_2$=1450/29=50 take i_N=50

2.Determine rated power of gearbox:

$P_1=P_2/\eta$=100/(94%)=106.4KW

$P_{1N} \geqslant P_1 \cdot f_1 \cdot f_2 \cdot S_F$=106.4 × 1.5 × 1 × 1.4=223.4kW

Referring to the table of transmission capacity,

Choose foundation NO.12

3.Verify peak torque:

$P_{1N} \geqslant T_A \cdot n_1 \cdot f_3/9950$=1395 × 1450 × 0.5/9550=105.9kW

P_{1N}=234kW≥105.9kW Meet requirement.

4.Verify thermal capacity:

$P_{GA} \cdot f_4 \cdot f_8$=115 × 0.75 × 1=86.3kW≤100KW

Do not satisfy the requirement

$P_{GB} \cdot f_4 \cdot f_8$=281×0.75×1=210.8kW≥100KW

meet requirement

So auxiliary cooling device can meet the requirement of thermal capacity.

5.Determine type: BE312HDB-C50 -CW+UF21

10 Transmission Capacity Table

BE304–312(iN=16–90)

Code	i_N	n_1 (r/min)	n_{2N} (r/min)	BE304			BE305			BE306			BE307		
				T_{2N} (kN·m)	i_{ex}	P_{1N} (kW)	T_{2N} (kN·m)	i_{ex}	P_{1N} (kW)	T_{2N} (kN·m)	i_{ex}	P_{1N} (kW)	T_{2N} (kN·m)	i_{ex}	P_{1N} (kW)
C16	16	1740	109	6.7	15.6	74	10.5	14.9	120	12	15.3	137	20.0	15.5	226
		1450	90.6			62			100			114			188
		1150	71.9			49.2			79			90			149
		960	60.0			41.0			66			75			124
C18	18	1740	96.7	6.7	17.6	67	11.6	16.8	114	12.6	17.3	126	21.7	17.5	212
		1450	80.6			56			95			105			177
		1150	63.9			44.4			75			83			140
		960	53.3			37.1			63			70			117
C20	20	1740	87.0	6.7	18.7	60	11.6	17.9	106	13.2	18.4	120	21.7	20.2	197
		1450	72.5			50			88			100			164
		1150	57.5			39.7			70			79			130
		960	48.0			33.1			58			66			109
C22	22.4	1740	77.7	6.7	22.0	54	11.6	21.1	94	14.2	21.6	115	21.7	21.9	176
		1450	64.7			45.0			78			96			147
		1150	51.3			35.7			62			76			117
		960	42.9			29.8			52			64			97
C25	25	1740	69.6	6.7	24.9	49.2	11.6	23.9	84	15.5	24.5	113	21.7	24.8	157
		1450	58.0			41.0			70			94			131
		1150	46.0			32.5			56			75			104
		960	38.4			27.1			46.3			62			87
C28	28	1740	62.1	6.7	27.7	43.2	11.6	26.5	76	15.5	27.2	101	21.7	28.3	142
		1450	51.8			36.0			63			84			118
		1150	41.1			28.6			50			67			94
		960	34.3			23.8			41.7			56			78
C32	31.5	1740	55.2	6.7	31.2	38.4	11.6	29.9	67	15.5	30.7	89	21.7	31.9	126
		1450	46.0			32.0			56			74			105
		1150	36.5			25.4			44.4			59			83
		960	30.5			21.2			37.1			49.0			70
C36	35.5	1740	49.0	6.7	33.2	33.6	11.6	31.8	59	15.5	32.7	79	21.7	37.0	110
		1450	40.8			28.0			49.0			66			92
		1150	32.4			22.2			38.9			52			73
		960	27.0			18.5			32.4			43.7			61
C40	40	1740	43.5	6.7	39.1	30.0	11.6	37.5	53	15.5	38.4	71	21.7	40.0	100
		1450	36.3			25.0			44.0			59			83
		1150	28.8			19.8			34.9			46.8			66
		960	24.0			16.6			29.1			39.1			55
C45	45	1740	38.7	6.7	44.3	26.4	11.6	42.5	46.8	15.5	43.6	61	21.7	45.3	86
		1450	32.2			22.0			39.0			51			72
		1150	25.6			17.4			30.9			40.4			57
		960	21.3			14.6			25.8			33.8			47.7
C50	50	1740	34.8	6.7	48.7	24.0	11.6	46.7	42.0	15.5	47.9	55	21.7	49.8	79
		1450	29.0			20.0			35.0			46.0			66
		1150	23.0			15.9			27.8			36.5			52
		960	19.2			13.2			23.2			30.5			43.7
C56	56	1740	31.1	6.7	56.2	21.6	11.6	53.9	37.2	15.5	55.3	50	21.7	57.5	71
		1450	25.9			18.0			31.0			42.0			59
		1150	20.5			14.3			24.6			33.3			46.8
		960	17.1			11.9			20.5			27.8			39.1
C63	63	1740	27.6	6.7	60.9	19.2	11.6	58.4	32.4	15.5	59.9	44.4	21.7	62.3	61
		1450	23.0			16.0			27.0			37.0			51
		1150	18.3			12.7			21.4			29.3			40.4
		960	15.2			10.6			17.9			24.5			33.8
C71	71	1740	24.5	6.7	68.7	16.8	11.6	65.8	28.8	15.5	67.5	39.6	20.0	70.2	50
		1450	20.4			14.0			24.0			33.0			42.0
		1150	16.2			11.1			19.0			26.2			33.3
		960	13.5			9.3			15.9			21.8			27.8
C80	80	1740	21.8	6.7	78.8	14.9	11.6	75.5	25.2	15.5	77.5	34.8	20.0	80.5	44.7
		1450	18.1			12.0			21.0			29.0			37.0
		1150	14.4			9.9			16.7			23.0			29.6
		960	12.0			8.2			13.9			19.2			24.7
C90	90	1740	19.3	6.7	85.8	13.3	11.6	82.3	22.8	15.5	84.4	31.2	20.0	87.8	39.8
		1450	16.1			11.0			19.0			26.0			33.0
		1150	12.8			8.8			15.1			20.6			26.3
		960	10.7			7.3			12.6			17.2			21.9

BE308			BE309			BE310			BE311			BE312		
T_{2N} (kN・m)	i_{ex}	P_{1N} (kW)	T_{2N} (kN・m)	i_{ex}	P_{1N} (kW)	T_{2N} (kN・m)	i_{ex}	P_{1N} (kW)	T_{2N} (kN・m)	i_{ex}	P_{1N} (kW)	T_{2N} (kN・m)	i_{ex}	P_{1N} (kW)
21.5	15.3	245	31.0	15.6	354	35.6	15.4	406	60	15.4	683	67	15.5	756
		204			295			338			569			630
		162			234			268			451			500
		135			195			224			377			417
23.1	17.2	232	34.0	17.6	341	37.5	17.4	377	62	17.4	624	70	17.4	701
		193			284			314			520			584
		153			225			249			412			463
		128			188			208			344			387
25.0	19.9	227	35.7	20.4	325	39.3	20.1	358	64	20.1	577	73	20.2	661
		189			271			298			481			551
		150			215			236			381			437
		125			179			197			318			365
27.2	21.6	215	35.7	22.1	290	43.8	21.8	340	64	21.8.	516	78	21.8	614
		179			242			283			430			512
		142			192			224			341			406
		119			160			187			285			339
27.2	24.4	197	35.7	25.0	260	43.8	24.7	319	64	24.7	462	78	24.7	563
		164			217			266			385			469
		130			172			211			305			372
		109			144			176			255			311
27.2	27.9	178	35.7	27.1	233	43.8	26.7	287	64	28.9	416	78	29.0	505
		148			194			239			347			421
		117			154			190			275			334
		98			128			158			230			279
27.2	31.5	157	35.7	30.5	208	43.8	30.1	256	64	32.6	370	78	32.6	450
		131			173			213			308			375
		104			137			169			244			297
		87			115			141			204			248
27.2	36.5	138	35.7	35.4	182	43.8	34.9	223	64	37.7	324	78	37.8	394
		115			152			186			270			328
		91			121			148			214			260
		76			101			123			179			217
27.2	39.4	125	35.7	38.2	164	43.8	37.8	202	64	40.8	293	78	40.9	356
		104			137			168			244			297
		82			109			133			194			236
		69			91			111			162			197
27.2	44.7	108	35.7	43.3	143	43.8	42.8	175	64	46.3	254	78	46.3	308
		90			119			146			212			257
		71			94			116			168			204
		60			79			97			140			170
27.2	49.2	98	35.7	47.7	130	43.8	47.1	158	64	50.9	230	78	51.0	281
		82			108			132			192			234
		65			86			105			152			186
		54			72			87			127			155
27.2	56.7	88	35.7	55.0	116	43.8	54.3	143	64	58.7	208	78	58.8	253
		73			97			119			173			211
		58			77			94			137			167
		48.3			64			79			115			140
27.2	61.5	79	35.7	59.6	103	43.8	58.8	127	64	63.6	185	78	63.7	226
		66			86			106			154			188
		52			68			84			122			149
		43.7			57			70			102			124
27.2	69.3	68	34.0	67.2	86	43.8	66.3	112	60	71.7	152	78	71.8	196
		57			72			93			127			163
		45.2			57			74			101			129
		37.7			47.7			62			84			108
27.2	79.5	60	34.0	77.0	77	43.8	76.1	100	60	82.2	135	78	82.3	175
		50			64			83			113			146
		39.7			51			66			89			116
		33.1			42.3			55			75			97
25.2	86.6	52	34.0	84.0	68	43.8	82.9	88	60	89.6	120	78	89.7	152
		43.0			57			73			100			127
		34.1			45.0			58			79			101
		28.5			37.6			48.3			66			84

BE313-318(iN=16-90)

Code	i_N	n_1 (r/min)	n_{2N} (r/min)	BE313			BE314			BE315		
				T_{2N} (kN·m)	i_{ex}	P_{1N} (kW)	T_{2N} (kN·m)	i_{ex}	P_{1N} (kW)	T_{2N} (kN·m)	i_{ex}	P_{1N} (kW)
C16	16	1740	108.8	91	14.898	1113	112	14.909	1369	148	15.260	1767*
		1450	90.6			927			1141			1473
		1150	71.9			736			905			1168
		960	60.0			614			755			975
C18	18	1740	96.7	91	16.794	987	112	16.806	1214	148	17.202	1568*
		1450	80.6			823			1012			1306
		1150	63.9			653			802			1036
		960	53.3			545			670			865
C20	20	1740	87.0	91	19.445	853	119	19.460	1114	153	19.918	1400*
		1450	72.5			711			928			1166
		1150	57.5			564			736			925
		960	48.0			470			615			772
C22	22.4	1740	77.7	91	21.032	788	119	21.048	1030	153	21.543	1294*
		1450	64.7			657			858			1078
		1150	51.3			521			681			855
		960	42.9			435			568			714
C25	25	1740	69.6	91	23.836	696	125	23.854	955	153	24.415	1142*
		1450	58.0			580			796			951
		1150	46.0			460			631			755
		960	38.4			384			527			630
C28	28	1740	62.1	91	27.465	604	125	27.485	829	153	27.279	1022*
		1450	51.8			503			691			852
		1150	41.1			399			548			675
		960	34.3			333			457			564
C32	31.5	1740	55.2	91	30.960	536	125	30.983	735	153	30.751	907*
		1450	46.0			446			613			755
		1150	36.5			354			486			599
		960	30.5			295			406			500
C36	35.5	1740	49.0	91	35.849	463	125	35.876	635	153	35.607	783*
		1450	40.8			385			529			652
		1150	32.4			306			420			517
		960	27.0			255			350			432
C40	40	1740	43.5	91	38.774	428	125	38.803	587	153	38.512	724*
		1450	36.3			356			489			603
		1150	28.8			283			388			478
		960	24.0			236			324			399
C45	45	1740	38.7	91	43.944	377	125	43.976	518	153	43.647	639*
		1450	32.2			314			432			532
		1150	25.6			249			342			422
		960	21.3			208			286			352
C50	50	1740	34.8	91	48.338	343	125	48.374	471	153	48.012	581
		1450	29.0			286			392			484
		1150	23.0			227			311			384
		960	19.2			189			260			320
C56	56	1740	31.1	91	55.775	297	125	55.816	408	153	55.398	503
		1450	25.9			248			340			419
		1150	20.5			196			270			333
		960	17.1			164			225			278
C63	63	1740	27.6	91	60.423	274	125	60.468	377	153	60.015	464
		1450	23.0			229			314			387
		1150	18.3			181			249			307
		960	15.2			151			208			256
C71	71	1740	24.5	91	68.113	243	125	68.164	334	153	67.653	412
		1450	20.4			203			278			343
		1150	16.2			161			221			272
		960	13.5			134			184			227
C80	80	1740	21.8	91	78.122	212	125	78.180	291	153	77.595	359
		1450	18.1			177			243			299
		1150	14.4			140			193			237
		960	12.0			117			161			198
C90	90	1740	19.3	91	85.141	195	125	85.204	267	153	84.566	330
		1450	16.1			162			223			275
		1150	12.8			129			177			218
		960	10.7			107			147			182

BE316			BE317			BE318		
T_{2N} (kN・m)	i_{ex}	P_{1N} (kW)	T_{2N} (kN・m)	i_{ex}	P_{1N} (kW)	T_{2N} (kN・m)	i_{ex}	P_{1N} (kW)
183	15.248	2187*	220	15.643	2562*	253	16.020	2877*
		1822			2135			2398
		1445			1694			1902
		1206			1414			1588
183	17.189	1940*	220	18.113	2213*	265	18.058	2674*
		1616			1844			2228
		1282			1463			1767
		1070			1221			1475
183	19.903	1675*	220	19.591	2046*	265	20.910	2309*
		1396			1705			1924
		1107			1352			1526
		924			1129			1274
190	21.527	1608*	220	22.943	1747*	265	22.616	2135*
		1340			1456			1779
		1063			1155			1411
		887			964			1178
190	24.397	1419*	220	24.688	1624*	265	26.486	1823*
		1182			1353			1519
		938			1073			1205
		783			896			1006
190	27.259	1270*	220	27.830	1440*	265	28.500	1694*
		1058			1200			1412
		839			952			1120
		701			795			935
190	30.728	1127*	220	32.224	1244*	265	32.127	1503*
		939			1037			1252
		745			822			993
		622			686			829
190	35.580	973*	220	34.853	1150*	265	37.200	1298*
		811			958			1082
		643			760			858
		537			635			716
190	38.483	900*	220	40.817	982*	265	40.235	1200*
		750			818			1000
		595			649			793
		496			542			662
190	43.615	794*	220	43.450	923*	265	47.120	1025*
		661			769			854
		525			610			677
		438			509			565
190	47.976	722*	220	50.135	800*	265	50.160	963*
		601			666			802
		477			528			636
		398			441			531
190	55.357	625	220	54.313	738*	265	57.877	834*
		521			615			695
		413			488			551
		345			407			460
190	59.970	577	220	61.225	655*	265	62.700	770*
		481			546			642
		382			433			509
		318			361			425
190	67.603	512	220	70.222	571*	265	70.680	683*
		427			476			569
		338			377			451
		283			315			377
190	77.537	446	220	76.531	524*	265	81.067	596*
		372			436			496
		295			346			394
		246			289			329
190	84.503	410				265	88.350	546*
		341						455
		271						361
		226						302

BE405-412(iN=100-400)

Code	i_N	n_1 (r/min)	n_{2N} (r/min)	BE405			BE406			BE407			BE408		
				T_{2N} (kN·m)	i_{ex}	P_{1N} (kW)	T_{2N} (kN·m)	i_{ex}	P_{1N} (kW)	T_{2N} (kN·m)	i_{ex}	P_{1N} (kW)	T_{2N} (kN·m)	i_{ex}	P_{1N} (kW)
D10	100	1740	17.4	11.6	96.3	20.9	15.5	98.9	27.8	22.0	98.4	39.6	27.5	97.1	49.2
		1450	14.5			17.4			23.2			33.0			41.0
		1150	11.5			13.8			18.4			26.2			32.5
		960	9.60			11.5			15.4			21.8			27.1
D11	112	1740	15.5	11.6	109.2	18.6	15.5	112.0	24.4	22.0	111.5	34.8	27.5	110.0	44.4
		1450	12.9			15.5			20.3			29.0			37.0
		1150	10.3			12.3			16.1			23.0			29.3
		960	8.57			10.3			13.4			19.2			24.5
D13	125	1740	13.9	11.6	119.4	16.2	15.5	122.6	22.1	22.0	123.9	31.2	27.5	122.2	39.6
		1450	11.6			13.5			18.4			26.0			33.0
		1150	9.20			10.7			14.6			20.6			26.2
		960	7.68			8.9			12.2			17.2			21.8
D14	140	1740	12.4	11.6	134.6	14.5	15.5	138.1	19.7	22.0	139.6	27.6	27.5	137.8	34.8
		1450	10.4			12.1			16.4			23.0			29.0
		1150	8.21			9.6			13.0			18.2			23.0
		960	6.86			8.0			10.9			15.2			19.2
D16	160	1740	10.9	11.6	143.3	12.7	15.5	147.1	17.4	22.0	148.6	24.0	27.5	146.7	30.0
		1450	9.06			10.6			14.5			20.0			25.0
		1150	7.19			8.4			11.5			15.9			19.8
		960	6.00			7.0			9.6			13.2			16.6
D18	180	1740	9.67	11.6	168.6	11.6	15.5	173.0	15.1	22.0	174.9	21.6	27.5	172.6	27.6
		1450	8.06			9.7			12.6			18.0			23.0
		1150	6.39			7.7			10.0			14.3			18.2
		960	5.33			6.4			8.3			11.9			15.2
D20	200	1740	8.70	11.6	191.1	10.6	15.5	196.1	13.9	22.0	198.2	19.2	27.5	195.6	24.0
		1450	7.25			8.8			11.6			16.0			20.0
		1150	5.75			7.0			9.2			12.7			15.9
		960	4.80			5.8			7.7			10.6			13.2
D22	224	1740	7.77	11.6	210.2	9.4	15.5	215.7	12.4	22.0	218.0	18.0	27.5	215.1	21.6
		1450	6.47			7.8			10.3			15.0			18.0
		1150	5.13			6.2			8.2			11.9			14.3
		960	4.29			5.2			6.8			9.9			11.9
D25	250	1740	6.96	11.6	242.5	8.4	15.5	248.9	11.3	22.0	251.6	15.6	27.5	248.2	19.2
		1450	5.80			7.0			9.4			13.0			16.0
		1150	4.60			5.6			7.5			10.3			12.7
		960	3.84			4.63			6.2			8.6			10.6
D28	280	1740	6.21	11.6	262.7	7.6	15.5	269.6	10.1	22.0	272.5	14.4	27.5	268.9	18.0
		1450	5.18			6.3			8.4			12.0			15.0
		1150	4.11			5.0			6.7			9.5			11.9
		960	3.43			4.17			5.6			7.9			9.9
D32	315	1740	5.52	11.2	296.2	6.5	15.5	303.9	8.9	20.5	307.2	12.0	27.5	303.2	15.6
		1450	4.60			5.4			7.4			10.0			13.0
		1150	3.65			4.28			5.9			7.9			10.3
		960	3.05			3.58			4.90			6.6			8.6

BE409			BE410			BE411			BE412		
T_{2N} (kN・m)	i_{ex}	P_{1N} (kW)	T_{2N} (kN・m)	i_{ex}	P_{1N} (kW)	T_{2N} (kN・m)	i_{ex}	P_{1N} (kW)	T_{2N} (kN・m)	i_{ex}	P_{1N} (kW)
36.0	104.8	65	44.5	103.5	80	62	99.8	112	78	99.9	142
		54			67			93			118
		42.8			53			74			94
		35.8			44.4			62			78
36.0	116.5	58	44.5	115.0	72	62	113.1	100	78	113.2	126
		48.0			60			83			105
		38.1			47.6			66			83
		31.8			39.7			55			70
36.0	131.3	52	44.5	129.6	64	62	129.2	89	78	129.4	114
		43.0			53			74			95
		34.1			42.0			59			75
		28.5			35.1			49			63
36.0	139.8	45.6	44.5	138.0	56	62	145.7	80	78	145.9	101
		38.0			47.0			67			84
		30.1			37.3			53			67
		25.2			31.1			44.4			56
36.0	164.4	40.8	44.5	162.4	50	62	168.7	70	78	168.9	88
		34.0			42.0			58			73
		27.0			33.3			46.0			58
		22.5			27.8			38.4			48.3
36.0	186.3	36.0	44.5	184.0	44.4	62	182.5	61	78	182.7	78
		30.0			37.0			51			65
		23.8			29.3			40.4			52
		19.9			24.5			33.8			43
36.0	205.0	32.4	44.5	202.4	39.6	62	206.8	55	78	207.1	71
		27.0			33.0			46.0			59
		21.4			26.2			36.5			46.8
		17.9			21.8			30.5			39.1
36.0	236.5	28.8	44.5	233.5	36.0	62	227.5	50	78	227.8	62
		24.0			30.0			42.0			52
		19.0			23.8			33.3			41.2
		15.9			19.9			27.8			34.4
36.0	256.2	25.2	44.5	253.0	31.2	62	262.5	44.4	78	262.8	56
		21.0			26.0			37.0			47.0
		16.7			20.6			29.3			37.3
		13.9			17.2			24.5			31.1
36.0	288.8	22.8	44.5	285.2	27.6	62	284.3	39.6	78	284.7	52
		19.0			23.0			33.0			43.0
		15.1			18.2			26.2			34.1
		12.6			15.2			21.8			28.5
34.0	331.3	19.2	44.5	327.1	25.2	62	320.5	34.8	78	321.0	45.6
		16.0			21.0			29.0			38.0
		12.7			16.7			23.0			30.1
		10.6			13.9			19.2			25.2
34.0	361.0	16.8	44.5	356.5	22.8	60	327.6	30.8	78	368.2	39.6
		14.0			19.0			26.0			33.0
		11.1			15.1			20.4			26.2
		9.30			12.6			17.0			21.8
						60	400.7	27.4	74	401.2	33.6
								23.0			28.0
								18.1			22.2
								15.1			18.5

BE413-418(iN=90-400)

Code	i_N	n_1 (r/min)	n_{2N} (r/min)	BE413			BE414			BE415		
				T_{2N} (kN・m)	i_{ex}	P_{1N} (kW)	T_{2N} (kN・m)	i_{ex}	P_{1N} (kW)	T_{2N} (kN・m)	i_{ex}	P_{1N} (kW)
D10	100	1740	17.4	91	96.935	171	125	97.007	235	153	96.280	290
		1450	14.5			143			196			241
		1150	11.5			113			155			191
		960	9.6			94			130			160
D11	112	1740	15.5	91	109.859	151	125	109.941	207	153	109.118	255
		1450	12.9			126			173			213
		1150	10.3			100			137			169
		960	8.6			83			114			141
D13	125	1740	13.9	91	119.014	139	125	119.103	191	153	127.783	218
		1450	11.6			116			159			182
		1150	9.2			92			126			144
		960	7.7			77			106			120
D14	140	1740	12.4	91	134.162	124	125	134.261	170	153	144.046	194
		1450	10.4			103			141			161
		1150	8.2			82			112			128
		960	6.9			68			94			107
D16	160	1740	10.9	91	155.345	107	125	155.461	146	153	166.790	167
		1450	9.1			89			122			139
		1150	7.2			71			97			110
		960	6.0			59			81			92
D18	180	1740	9.7	91	168.020	99	125	168.145	135	153	180.399	155
		1450	8.1			82			113			129
		1150	6.4			65			90			102
		960	5.3			54			75			85
D20	200	1740	8.7	91	190.423	87	125	190.565	120	153	204.452	136
		1450	7.3			73			100			114
		1150	5.8			58			79			90
		960	4.8			48			66			75
D22	224	1740	7.8	91	209.465	79	125	209.621	109	153	224.897	124
		1450	6.5			66			91			103
		1150	5.1			52			72			82
		960	4.3			44			60			68
D25	250	1740	7.0	91	241.691	69	125	241.871	94	153	259.497	107
		1450	5.8			57			78			90
		1150	4.6			45			62			71
		960	3.8			38			52			59
D28	280	1740	6.2	91	261.832	63	125	262.026	87	153	281.122	99
		1450	5.2			53			72			83
		1150	4.1			42			57			66
		960	3.4			35			48			55
D32	315	1740	5.5	91	295.156	56	125	295.375	77	153	316.901	88
		1450	4.6			47			64			73
		1150	3.7			37			51			58
		960	3.0			31			43			49
D36	355	1740	4.9	91	338.530	49	125	338.782	67	153	363.470	77
		1450	4.1			41			56			64
		1150	3.2			32			44			51
		960	2.7			27			37			42
D40	400	1740	4.4	91	368.944	45	125	369.219	62	153	396.126	70
		1450	3.6			37			51			59
		1150	2.9			30			41			47
		960	2.4			25			34			39

BE416			BE417			BE418		
T_{2N} (kN・m)	i_{ex}	P_{1N} (kW)	T_{2N} (kN・m)	i_{ex}	P_{1N} (kW)	T_{2N} (kN・m)	i_{ex}	P_{1N} (kW)
			220	87.132	460			
					383			
					304			
					254			
190	96.209	360	220	98.750	406	265	100.588	480
		300			338			400
		238			268			317
		199			224			265
190	109.036	317	220	115.641	347	265	114.000	424
		265			289			353
		210			229			280
		175			191			234
190	127.687	271	220	130.359	307	265	133.500	362
		226			256			301
		179			203			239
		150			170			200
190	143.939	241	220	150.943	266	265	150.491	321
		200			221			267
		159			176			212
		133			147			177
190	166.666	208	220	163.259	246	265	174.253	277
		173			205			231
		137			162			183
		115			135			153
190	180.265	192	220	185.026	217	265	188.471	256
		160			181			213
		127			143			169
		106			120			141
190	204.300	169	220	203.529	197	265	213.600	226
		141			164			188
		112			130			149
		93			109			125
190	224.730	154	220	234.841	171	265	234.960	205
		128			142			171
		102			113			136
		85			94			113
190	259.304	134	220	254.411	158	265	271.108	178
		111			131			148
		88			104			118
		74			87			98
190	280.912	123	220	286.791	140	265	293.700	164
		103			116			137
		81			92			109
		68			77			91
190	316.665	109	220	328.936	122	265	331.080	146
		91			102			122
		72			81			96
		60			67			80
190	363.200	95	220	358.488	112	265	379.733	127
		79			93			106
		63			74			84
		53			62			70
190	395.831	87				265	413.850	117
		73						97
		58						77
		48						64

11 Rated Thermal Capacity Table (kW)

BE304-312(kW)

Code	I_N		BE304				BE305				BE306				BE307			
			960	1150	1450	1740	960	1150	1450	1740	960	1150	1450	1740	960	1150	1450	1740
C16	16	PGA	35.2	37	36.8	36.8	47.9	49.5	48.3	46.7	55.4	57	55.4	53.1	74	75.7	72.9	68.5
		PGB	61.3	70	78.6	86.9	87.5	99.5	110	121	100	113	126	138	137	156	172	187
C18	18	PGA	34.3	36	35.9	35.9	46.5	48.1	47.2	45.9	53.7	55.5	54.1	52.2	71.7	73.6	71.1	67.4
		PGB	59.5	67.9	76.4	84.5	84.8	96.5	107	118	97.1	110	122	134	133	151	167	182
C20	20	PGA	32.4	34	34	34.1	44.6	46.4	45.6	44.5	51.9	53.7	52.6	51	68.9	70.9	68.8	65.7
		PGB	56.1	64.1	72.1	79.9	81.3	92.6	103	113	93.5	106	118	129	127	145	161	175
C22	22.4	PGA	31.6	33.3	33.3	33.6	44	45.8	45.1	44.3	50.4	52.3	51.4	50.1	66.8	68.9	67.2	64.6
		PGB	54.6	62.4	70.3	77.9	80	91.1	101	112	90.7	103	115	126	123	140	155	170
C25	25	PGA	30.1	31.8	31.9	32.3	41.8	43.7	43.3	43	48.6	50.6	50.1	49.4	65	67.4	66.2	64.6
		PGB	51.7	59.1	66.7	74.1	75.5	86.2	96.6	106	86.9	99	110	122	119	135	151	165
C28	28	PGA	29	30.7	30.9	31.4	40.6	42.6	42.5	42.6	48	50.3	50	49.9	62.1	64.8	64.1	63.4
		PGB	49.4	56.6	63.9	71.1	72.7	83	93.3	103	85.5	97.5	109	121	112	127	143	157
C32	31.5	PGA	27.5	29.1	29.4	30.1	38.6	40.6	40.7	41	45.5	47.8	47.8	48	59.2	62	61.7	61.6
		PGB	46.8	53.7	60.7	67.6	68.7	78.5	88.5	98.1	80.6	92.1	103	114	106	121	136	150
C36	35.5	PGA	25.9	27.5	27.8	28.5	36.4	38.4	38.6	39.1	44	46.3	46.4	46.9	56.4	59.2	59.1	59.4
		PGB	43.8	50.2	56.8	63.3	64.3	73.6	83	92.1	77.5	88.6	99.8	110	100	114	129	142
C40	40	PGA	22.6	24	24.3	25	31.7	33.5	33.7	34.2	41.8	44.1	44.3	44.9	49.4	52	52	52.4
		PGB	38.1	43.7	49.4	55.1	55.5	63.5	71.6	79.6	73.3	83.8	94.6	105	87.1	99.6	112	124
C45	45	PGA	22.1	23.5	23.8	24.5	30.9	32.7	32.9	33.5	39.3	41.5	41.8	42.5	48	50.6	50.8	51.3
		PGB	37.2	42.6	48.3	53.9	54	61.8	69.8	77.7	68.5	78.4	88.5	98.4	84.1	96.1	108	120
C50	50	PGA	22.4	23.8	24.2	24.9	30.8	32.7	33	33.9	34.4	36.4	36.8	37.7	47.6	50.3	50.7	51.7
		PGB	37.4	42.9	48.7	54.4	53.3	61.1	69.2	77.1	59.4	68	76.9	85.7	82.5	94.5	106	118
C56	56	PGA	20.7	22	22.4	23.1	28.5	30.2	30.7	31.6	33.6	35.7	36.2	37.2	44.3	47	47.5	48.7
		PGB	34.4	39.4	44.8	50	49.3	56.5	64	71.4	57.8	66.3	75.1	83.7	76.7	87.9	99.5	110
C63	63	PGA	19.9	21.2	21.6	22.3	27.4	29.1	29.5	30.4	33.4	35.5	36	37.1	42.8	45.5	46.1	47.3
		PGB	33.1	38	43.2	48.3	47.3	54.3	61.6	68.7	57.1	65.5	74.2	82.9	74.1	84.9	96.2	107
C71	71	PGA	18.4	19.6	20	20.7	26.1	27.7	28.2	29.1	30.8	32.8	33.3	34.3	40.8	43.3	43.9	45.2
		PGB	30.7	35.3	40	44.8	44.9	51.6	58.5	65.3	52.6	60.3	68.4	76.3	70.5	80.9	91.7	102
C80	80	PGA	20.7	22	19.2	19.9	30.1	32.1	27	27.9	29.5	31.4	31.9	32.9	39.1	41.5	42.1	43.4
		PGB	34.6	39.7	38.5	43.2	51.9	59.6	56.4	63	50.6	58.1	65.9	73.6	67.8	77.9	88	98.4
C90	90	PGA	19.9	21.2	18.3	19	28.3	30	25.8	26.7	28.2	30	30.5	31.5	37.4	39.6	40.3	41.6
		PGB	33	37.9	36.7	41.1	48.7	55.8	53.6	59.9	48.1	55.2	62.7	70	64.5	74.1	83.7	93.6

BE308				BE309				BE310				BE311				BE312			
960	1150	1450	1740	960	1150	1450	1740	960	1150	1450	1740	960	1150	1450	1740	960	1150	1450	1740
86.2	87.5	83.3	76.8	99.4	100	94.3	85.1	110	110	103	90.8	133	129	114	89.8	155	147	125	*
158	178	196	212	193	218	239	258	214	240	262	281	300	334	358	375	347	384	407	419
83.2	84.8	81.1	75.5	96.5	97.7	92.5	84.4	102	102	96.3	86.1	132	129	115	93.1	156	149	129	*
153	173	191	207	187	211	232	250	197	222	243	261	293	328	353	371	347	386	411	426
79.4	81.2	78	73.3	92.8	94.3	89.8	82.9	105	106	100	90.8	126	124	112	93.3	147	141	124	96
145	165	182	198	179	202	223	241	203	228	251	270	280	314	339	358	323	360	385	401
77.4	79.4	76.7	72.7	90.7	92.5	88.6	82.7	97.5	98.9	93.9	86.2	122	120	110	93.7	148	144	128	102
141	160	177	193	175	198	218	237	186	210	231	250	266	298	324	343	324	361	388	407
74.7	77.1	75.2	72.5	87.3	89.7	86.9	82.8	94.3	96.4	92.8	87.2	117	117	109	93.7	144	142	130	110
134	153	170	186	166	188	209	228	178	202	223	243	266	298	324	353	309	346	375	398
72.7	75.5	74.4	72.9	83.9	86.8	85	82.5	92.7	95.6	93.1	89.4	113	114	109	100	140	140	131	117
130	148	165	182	157	179	199	218	174	197	220	240	238	269	296	320	295	332	363	390
70.3	73.4	72.7	72	80.6	83.9	82.7	81.3	89.1	92.4	90.7	88.4	108	111	106	100	133	135	129	118
125	143	160	177	149	170	190	209	165	188	210	230	225	254	282	306	276	312	344	371
67	70.2	69.8	69.7	76.9	80.3	79.6	78.9	85.3	88.8	87.7	86.3	105	108	105	100	128	131	125	118
119	136	152	168	141	161	181	199	156	178	199	219	215	244	271	296	262	296	328	356
64.1	67.3	67.1	67.2	72.1	75.4	75	74.7	81.6	85.2	84.4	83.6	99.6	102	100	97	122	125	121	115
112	128	144	160	131	150	168	186	149	170	191	211	201	229	255	279	246	279	310	337
60.9	64	64	64.4	66.4	69.6	69.4	69.5	77.7	81.3	80.8	80.4	91.6	95	93.2	90.8	117	121	118	113
106	121	137	151	120	137	154	170	140	160	180	199	184	210	234	257	236	268	298	326
53.6	56.6	56.9	57.8	65.5	69.1	69.3	70.2	73.1	77	77	77.7	92.4	96.6	95.8	95.2	112	116	115	113
92.5	105	119	132	117	133	151	167	131	150	169	188	181	207	232	256	221	251	281	310
52.1	55.2	55.7	57	60.7	64.3	64.8	66.1	67.7	71.5	72	73.2	84.5	88.9	88.9	89.4	103	108	108	108
89.6	102	116	129	108	124	140	156	120	137	155	173	164	188	211	234	203	232	260	288
51.5	54.6	55.2	56.6	58.7	62.2	62.8	64.2	66.5	70.4	71	72.5	81.7	86.1	86.3	87.3	103	108	108	108
88.1	100	114	127	104	119	135	150	117	134	151	168	158	180	203	226	198	227	255	283
47.8	50.8	51.4	52.7	55	58.3	59	60.4	61.7	65.3	65.9	67.4	75.7	79.8	80.2	81.3	94.8	99.8	99.9	100
81.7	93.6	106	118	97.8	112	126	141	108	124	140	156	146	167	189	210	180	206	232	257
46.2	46.8	47.4	48.8	53.2	56.3	57	58.6	59.6	63.1	63.8	65.3	73.1	77.2	77.6	78.8	90.7	95.5	95.8	96.9
75.1	86.1	97.6	108	94.6	108	121	136	105	120	136	151	142	162	184	203	173	198	224	248
44	46.8	47.4	48.8	50.6	53.7	54.4	56	55.9	59.3	60	61.5	68.6	72.6	73	74.2	84.5	89.2	89.6	90.9
75.1	86.1	97.6	108	89.9	103	116	129	98.4	112	127	142	133	151	171	191	161	184	208	231

BE313-318(kW)

Code	iN		BE313				BE314				BE315			
			960	1150	1450	1740	960	1150	1450	1740	960	1150	1450	1740
C16	16	PGA	165	151	122	*	191	174	138	*	221	185	*	*
		PGB	388	426	445	450	448	492	511	513	553	597	597	568
C18	18	PGA	167	155	128	*	195	180	146	*	216	185	*	*
		PGB	392	432	454	462	452	498	520	527	531	575	581	560
C20	20	PGA	159	149	126	*	180	168	140	*	212	185	*	*
		PGB	367	406	428	440	413	456	480	489	513	557	568	555
C22	22.4	PGA	154	147	126	*	185	174	148	*	210	187	*	*
		PGB	349	387	412	426	417	462	489	503	498	544	559	554
C25	25	PGA	149	144	128	102	176	170	150	116	204	189	153	*
		PGB	329	367	395	414	390	435	466	486	466	513	537	544
C28	28	PGA	144	143	131	112	172	170	155	130	205	195	168	*
		PGB	312	350	380	404	373	417	452	479	453	503	535	554
C32	31.5	PGA	139	140	131	116	165	165	154	135	196	191	170	137
		PGB	296	333	365	391	350	393	430	460	423	473	508	534
C36	35.5	PGA	135	137	130	119	159	160	151	137	192	189	173	146
		PGB	284	321	353	381	332	375	412	443	407	457	495	525
C40	40	PGA	128	130	125	116	152	155	147	136	183	182	168	146
		PGB	267	302	334	362	315	355	392	424	383	430	469	500
C45	45	PGA	119	122	117	110	147	150	144	134	171	171	160	142
		PGB	244	279	306	333	301	341	377	409	352	397	434	465
C50	50	PGA	122	126	124	120	141	146	142	138	178	182	174	163
		PGB	244	278	310	340	283	321	358	392	356	402	445	483
C56	56	PGA	113	118	117	116	131	136	135	133	165	171	167	161
		PGB	223	254	285	314	258	294	330	363	325	369	411	450
C63	63	PGA	109	114	114	114	133	139	138	137	159	165	162	158
		PGB	214	244	275	303	259	296	332	367	309	352	393	431
C71	71	PGA	103	108	107	107	122	128	127	127	151	158	155	153
		PGB	201	229	258	285	236	269	302	334	292	333	372	409
C80	80	PGA	98	102	103	103	117	123	123	123	145	149	150	146
		PGB	217	233	243	261	227	259	291	323	282	312	351	376
C90	90	PGA	92	98	98	97	110	115	115	116	139	143	145	140
		PGB	206	214	219	241	212	242	273	302	271	296	330	352

BE316				BE317				BE318			
960	1150	1450	1740	960	1150	1450	1740	960	1150	1450	1740
227	186	*	*	241	189	*	*	245	*	*	*
579	621	615	575	713	758	737	671	732	774	741	658
230	193	*	*	237	191	*	*	263	205	*	*
573	617	617	586	686	734	722	669	763	811	787	714
223	191	*	*	234	194	*	*	246	198	*	*
548	593	599	577	662	711	708	668	700	749	736	681
219	192	*	*	236	201	*	*	243	202	*	*
528	574	586	573	646	698	702	673	675	725	722	681
222	202	160	*	234	208	*	*	250	219	*	*
513	563	585	587	607	662	681	674	661	718	732	714
216	204	172	*	239	222	183	*	248	227	182	*
480	531	562	577	596	656	689	700	621	682	711	716
215	208	183	142	232	221	190	*	250	236	199	*
468	521	558	582	557	619	658	681	608	673	712	731
205	201	181	149	228	221	196	155	241	232	203	155
435	487	526	555	538	599	644	674	569	633	677	705
199	197	180	153	220	215	194	160	236	230	204	164
419	470	510	541	508	568	614	647	548	611	657	690
190	189	176	154	206	204	187	159	228	224	203	169
395	444	484	517	470	526	572	607	520	581	629	665
178	182	174	161	219	221	210	191	216	218	204	184
636	411	453	491	478	539	593	640	481	542	594	639
186	191	186	179	205	210	203	193	228	233	225	211
365	415	461	504	438	497	552	601	488	553	612	665
171	177	173	168	198	204	199	192	211	217	211	202
333	378	422	463	419	475	529	579	447	507	563	615
164	170	167	163	187	194	190	184	204	210	205	198
318	362	404	444	393	446	498	546	426	484	539	590
157	163	161	158	178	184	185	173	193	200	196	190
301	343	384	423	374	416	468	524	400	454	507	556
144	157	160	153					184	190	189	182
289	332	364	402					383	414	476	502

BE405-412(kW)

Code	iN		BE405				BE406				BE407				BE408			
			960	1150	1450	1740	960	1150	1450	1740	960	1150	1450	1740	960	1150	1450	1740
D10	100	PGA	26.5	28.5	29.6	30.9	30.6	32.7	34	35.4	38.8	41.4	43.1	44.8	45.3	48.2	50.2	52
D11	112	PGA	25.6	27.5	28.6	29.8	29.9	32	33.3	34.7	37.4	39.9	41.5	43.2	44	46.9	48.8	50.6
D13	125	PGA	24.5	26.3	27.4	28.5	28.6	30.6	31.8	33.2	35.7	38.2	39.7	41.4	41.6	44.4	46.2	48
D14	140	PGA	23.4	25.1	26.1	27.3	27.5	29.5	30.7	32	33.9	36.3	37.8	39.4	40.1	42.9	44.6	46.5
D16	160	PGA	21.5	23.1	24.1	25.2	26.3	28.2	29.4	30.7	30.9	33.2	34.5	36.1	38.2	41	42.7	42.5
D18	180	PGA	21.1	22.7	23.6	24.7	25.1	27	28.1	29.4	30.1	32.4	33.7	35.2	36.4	39	40.7	42.5
D20	200	PGA	20.4	21.9	22.8	23.9	23.1	24.9	25.9	27.1	29.9	32.1	33.5	35	33.2	35.7	37.2	38.9
D22	224	PGA	19	20.4	21.3	22.3	22.7	24.4	25.4	26.7	27.8	30	31.2	32.7	32.4	34.9	36.4	38.1
D25	250	PGA	18.5	20	20.8	21.8	21.8	23.5	24.5	25.7	26.9	29	30.2	31.7	32.1	34.6	36	37.8
D28	280	PGA	17.6	19	19.8	20.8	20.4	22	22.9	24.1	25.2	27.2	28.4	29.8	30	32.3	33.7	35.4
D32	315	PGA	16.5	17.8	18.6	19.5	19.8	21.4	22.3	23.5	23.6	25.5	26.6	27.9	28.8	31.1	32.4	34.1
D36	355	PGA	16	17.3	18.1	19	19	20.5	21.3	22.4	22.7	24.4	25.4	26.6	27.1	29.2	30.4	32
D40	400	PGA	15.4	16.6	17.3	18.1	17.7	19.1	19.9	21	21.2	22.7	23.7	24.9	25.4	27.4	28.6	30

BE413-418(kW)

Code	iN		BE413				BE414				BE415			
			960	1150	1450	1740	960	1150	1450	1740	960	1150	1450	1740
D10	100	PGA	112	117	121	123	130	135	140	142	146	150	156	155
D11	112	PGA	107	112	116	118	126	132	137	139	139	144	149	150
D13	125	PGA	102	108	112	114	119	125	130	133	132	138	143	144
D14	140	PGA	97.6	103	107	109	114	120	125	128	128	134	139	141
D16	160	PGA	92.4	97.8	101	104	110	116	121	124	121	127	132	135
D18	180	PGA	87.2	92.8	96.5	99.8	103	110	114	118	114	120	125	129
D20	200	PGA	85.2	91	94.7	98.3	98.5	105	109	113	112	119	124	128
D22	224	PGA	79.9	85.6	89.1	92.9	93.2	99.8	104	108	105	112	117	121
D25	250	PGA	77.3	83.1	86.6	90.6	90.6	97.4	101	106	102	109	114	119
D28	280	PGA	73	78.8	82.1	86.3	85.2	92	95.9	100	95	102	106	112
D32	315	PGA	69.6	75.2	78.4	82.3	82.4	89	92.7	97.4	89.7	96.9	100	106
D36	355	PGA	67	68.2	76.2	79.3	77.8	84	87.6	92	82.3	92.6	95	103
D40	400	PGA	63.2	65.1	72.8	76.5	74.1	80	83.4	87.6	79.6	89.1	92	99

BE409				BE410				BE411				BE412			
960	1150	1450	1740	960	1150	1450	1740	960	1150	1450	1740	960	1150	1450	1740
55.6	59.1	61.5	63.6	60.4	64.1	66.7	68.8	84.4	88.9	82.4	94.7	101	106	110	112
53.5	56.99	59.2	61.4	59	62.7	65.3	67.5	80.4	84.9	88.3	90.7	98	102	106	109
51	54.4	56.6	58.8	56	59.7	62.1	64.3	77	81.5	84.8	87.3	93	98.4	102	105
48.1	51.4	53.5	55.6	53.9	57.5	59.9	62.2	72.8	77.3	80.4	83.1	89	94.1	97.8	100
44	47	49	51	51.3	54.9	57.2	59.5	66.4	70.7	73.6	76.2	85	90.4	94.1	97.2
42.9	46	47.9	50	48.7	52.2	54.3	56.6	64.6	69	71.8	74.6	81	85.9	89.3	92.6
42	45.1	47	49.1	44.6	47.8	49.8	52	63.2	67.7	70.5	73.4	74	78.7	81.9	85.2
39.3	42.3	44	46.1	43.4	46.7	48.6	50.9	59.4	63.8	66.5	69.5	72	77	80.2	83.7
37.9	40.8	42.5	44.6	42.5	45.8	47.8	50.1	57.5	61.9	64.5	67.6	70	75.4	78.6	82.3
36.1	39	40.6	42.7	39.8	43	44.8	47.1	55	59.3	61.8	65	66	71	74	77.7
33.9	36.6	38.2	40.1	38.4	41.5	43.2	45.4	51.3	55.4	57.8	60.7	64	68.7	71.6	75.2
31.9	34.4	35.8	37.6	36.6	39.6	41.2	43.3	48.9	52.9	55.1	57.9	61	65.6	68.4	71.8
								46.6	52.9	52.5	55.2	57	61.2	63.8	67

BE416				BE417				BE418			
960	1150	1450	1740	960	1150	1450	1740	960	1150	1450	1740
				175	176	178	183				
160	163	169	168	164	167	170	173	180	182	188	185
151	155	161	161	157	161	165	167	169	173	179	177
144	149	155	155	149	154	160	159	161	166	172	171
137	143	148	150	144	149	156	155	154	159	165	166
132	138	143	146	136	142	150	147	148	155	160	162
124	131	136	140	128	135	143	140	139	146	152	155
117	125	130	134	126	134	143	139	132	140	146	150
116	123	128	133	117	125	135	130	130	138	144	149
108	116	120	126	114	122	133	127	122	131	136	142
104	113	117	123	107	115	126	120	117	127	132	139
98.5	106	110	116	101	109	119	113	110	119	124	131
92.4	99.7	103	109	97	102	113	108	104	113	117	123
88	95.2	99	105					108	110	113	117

12 Outline Dimensions

BE304H-318H(With auxiliary gearmotor)

BE3..HS BE3..HH BE3..HD

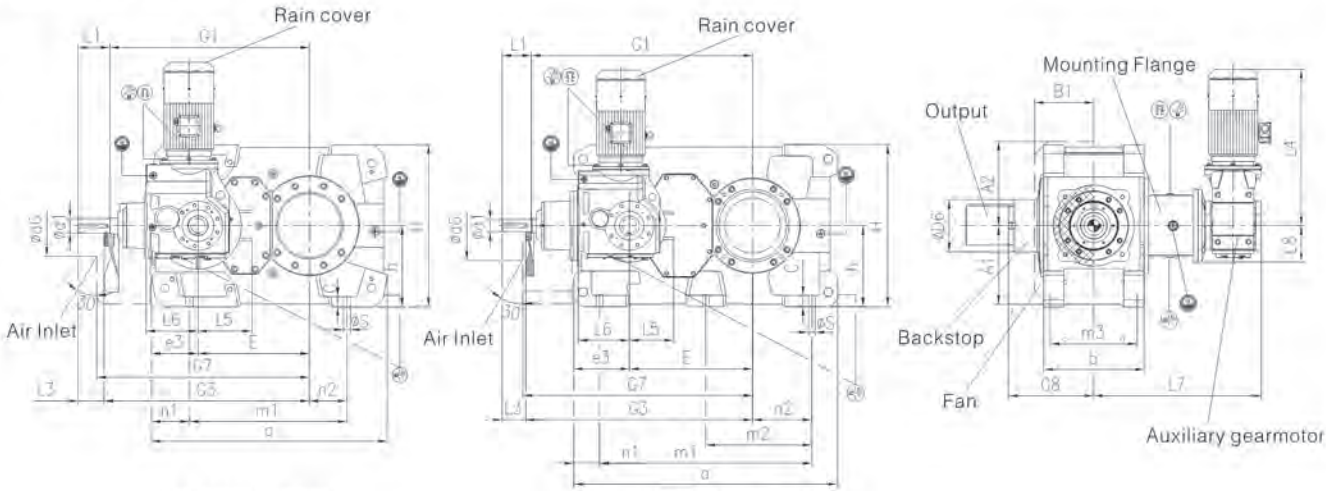

BE304H-312H BE313H-318H

Assembly Code: B		Assembly Code: D	
BE3..HS 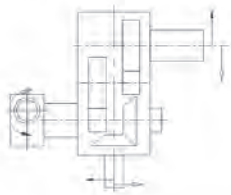	BE3..HH 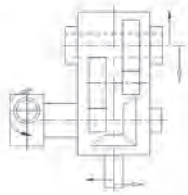	BE3..HS 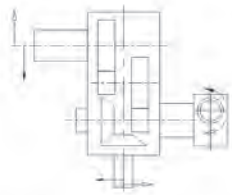	BE3..HH 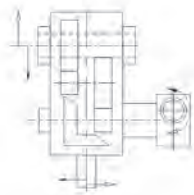
BE3..HD 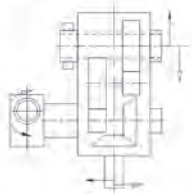		BE3..HD 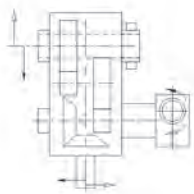	

Note:The solid arrow means that rotating direction is CW facing output shaft;
The hollow arrow means that rotating direction is CCW facing output shaft;

输出轴

BE3..HS Solid shaft	BE3..HH Hollow shaft	BE3..HD Hollow shaft with shrink disc
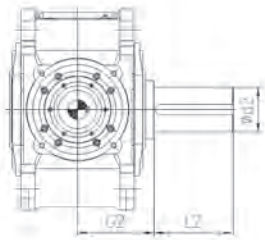	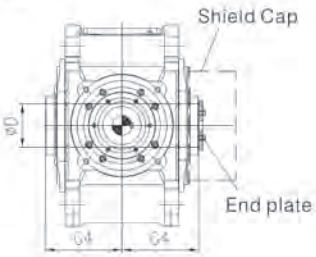	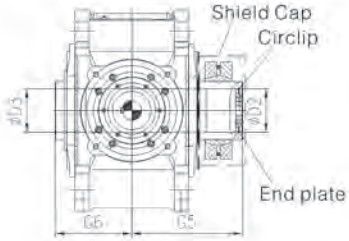

Size	Input Shaft						GearBox						
	iN≤56(Size:17) iN≤63(Size:04,05,06,07,08,09,10,11,12,13,14,15,16,18)			iN≥63(Size:17) iN≥71(Size:04,05,06,07,08,09,10,11,12,13,14,15,16,18)			G1	G3	a	A1	A2	b	B1
	d1	L1	L3	d1	L1	L3							
04	35k6	80	60	30k6	60	40	500	520	586	195	200	215	185
05	45k6	110	80	35k6	80	50	575	605	667	220	235	255	215
06	45k6	110	80	35k6	80	50	610	640	743	220	235	255	215
07	50k6	110	90	40k6	80	60	690	710	816	270	285	300	250
08	50k6	110	90	40k6	80	60	735	755	920	270	285	300	250
09	60m6	140	110	50k6	110	80	800	830	957	310	325	370	250
10	60m6	140	110	50k6	110	80	850	880	1062	310	325	370	250
11	75m6	140	110	60m6	140	110	960	990	1132	370	385	430	330
12	75m6	140	110	60m6	140	110	1035	1065	1292	370	385	430	330
13	85m6	170	135	70m6	140	105	1110	1145	1365	425	435	550	325
14	85m6	170	135	70m6	140	105	1180	1215	1505	425	435	550	325
15	95m6	170	135	75m6	140	105	1367	1402	1630	485	520	625	365
16	95m6	170	135	75m6	140	105	1413	1448	1720	485	520	625	365
17	115m6	210	175	90m6	170	135	1560	1595	1790	535	570	690	395
18	115m6	210	175	90m6	170	135	1620	1655	1910	535	570	690	395

Size	GearBox																			
	C	d6	e3	E	G7	G8	h	H	m1	m2	m3	n1	n2	S	L4	L5	L6	L7	L8	D6
04	28	150	110	270	540	193	200	400	355	/	180	112	85	19	527	136	112	400	100	125
05	28	160	130	315	630	217	230	460	430	/	220	113	100	19	617	140	140	475	125	150
06	28	160	130	350	665	217	230	490	510	/	220	113	145	19	617	140	140	475	125	150
07	35	210	160	385	735	255	280	560	545	/	260	131	130	24	633	161	180	550	150	175
08	35	210	160	430	780	255	280	580	650	/	260	131	190	24	633	161	180	550	150	175
09	40	260	185	450	860	298	320	640	635	/	320	156	155	28	676	175	180	620	150	190
10	40	260	185	500	910	298	320	670	735	/	320	156	205	28	676	175	180	620	150	190
11	50	210	225	545	1025	355	380	760	775	/	370	178	180	35	822	213	212	720	175	230
12	50	210	225	615	1095	355	380	790	930	/	370	178	265	35	822	213	212	720	175	230
13	60	210	250	635	1165	426	440	875	1090	545	475	142	305	35	951	240	250	870	225	290
14	60	210	250	705	1235	426	440	940	1230	685	475	137	375	35	951	240	250	870	225	290
15	70	210	316	762	1420	472	500	1000	1310	655	535	160	365	42	1116	273	316	995	225	310
16	70	210	320	808	1470	472	500	1035	1400	745	535	160	410	42	1116	273	320	995	225	310
17	80	230	400	860	1650	497	550	1105	1470	735	600	160	390	42	1193	298	400	1105	275	310
18	80	230	400	920	1710	497	550	1110	1590	855	600	160	450	42	1193	298	400	1105	275	310

Size	Output Shaft									Oil		Weight
	BE3..HS			BE3..HH		BE3..HD				KE	BE3..	
	d2	G2	L2	D	G4	D2	D3	G5	G6	(L)	(L)	(kg)
04	80m6	140	170	80H7	140	85H7	85H7	205	140	2.2	9	246
05	100m6	165	210	95H7	165	100H7	100H7	240	165	3.9	14	390
06	110m6	165	210	105H7	165	110H7	110H7	240	165	3.9	15	445
07	120m6	195	210	115H7	195	120H7	120H7	280	195	7.4	25	652
08	130m6	195	250	125H7	195	130H7	130H7	285	195	7.4	28	737
09	140m6	235	250	135H7	235	140H7	140H7	330	235	7.7	40	1020
10	160m6	235	300	150H7	235	150H7	150H7	350	235	7.7	42	1150
11	170m6	270	300	165H7	270	165H7	165H7	400	270	13.7	66	1658
12	180m6	270	300	180H7	270	180H7	180H7	405	270	13.7	72	1933
13	200m6	335	350	190H7	335	190H7	190H7	480	335	25	130	2762
14	220m6	335	350	210H7	335	210H7	210H7	480	335	25	140	3132
15	240m6	380	410	230H7	380	230H7	230H7	550	380	63	210	4488
16	250m6	380	410	240H7	380	240H7	240H7	550	380	63	220	4713
17	260m6	415	410	250H7	415	250H7	250H7	600	415	63	290	5802
18	280m6	415	470	275H7	415	280H7	280H7	600	415	63	300	6307

BE304D-318D(Without auxiliary gearmotor)

BE3..DS BE3..DH BE3..DD

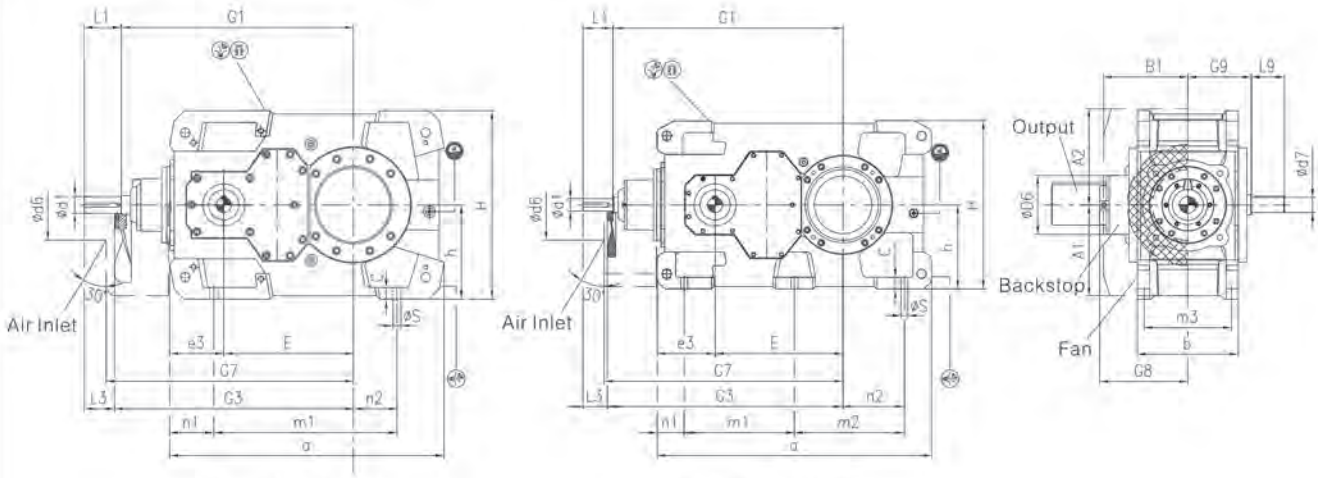

BE304D-312D BE313D-318D

Assembly Code: B		Assembly Code: D	
BE3..DS 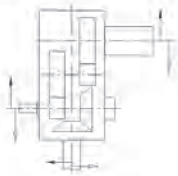	BE3..DH 	BE3..DS 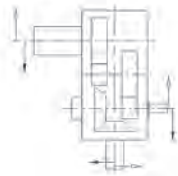	BE3..DH 
BE3..DD 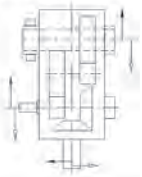		BE3..DD 	

Note:The solid arrow means that rotating direction is CW facing output shaft;
The hollow arrow means that rotating direction is CCW facing output shaft;

Output Shaft

BE3..DS
Solid shaft

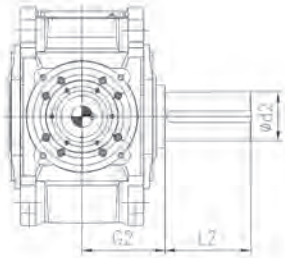

BE3..DH
Hollow shaft

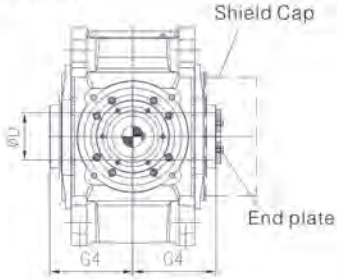

BE3..DD
Hollow shaft with shrink disc

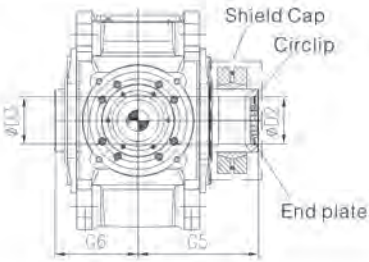

Size	Input Shaft						GearBox						
	iN≤56(Size:17) iN≤63(Size:04,05,06,07,08, 09,10,11,12,13,14,15,16,18)			iN≥63(Size:17) iN≥71(Size:04,05,06,07,08, 09,10,11,12,13,14,15,16,18)			G1	G3	a	A1	A2	b	B1
	d1	L1	L3	d1	L1	L3							
04	35k6	80	60	30k6	60	40	500	520	586	195	200	215	185
05	45k6	110	80	35k6	80	50	575	605	667	220	235	255	215
06	45k6	110	80	35k6	80	50	610	640	743	220	235	255	215
07	50k6	110	90	40k6	80	60	690	710	816	270	285	300	250
08	50k6	110	90	40k6	80	60	735	755	920	270	285	300	250
09	60m6	140	110	50k6	110	80	800	830	957	310	325	370	250
10	60m6	140	110	50k6	110	80	850	880	1062	310	325	370	250
11	75m6	140	110	60m6	140	110	960	990	1132	370	385	430	330
12	75m6	140	110	60m6	140	110	1035	1065	1292	370	385	430	330
13	85m6	170	135	70m6	140	105	1110	1145	1365	425	435	550	325
14	85m6	170	135	70m6	140	105	1180	1215	1505	425	435	550	325
15	95m6	170	135	75m6	140	105	1367	1402	1630	485	520	625	365
16	95m6	170	135	75m6	140	105	1413	1448	1720	485	520	625	365
17	115m6	210	175	90m6	170	135	1560	1595	1790	535	570	690	395
18	115m6	210	175	90m6	170	135	1620	1655	1910	535	570	690	395

Size	GearBox																	
	C	d6	e3	E	G7	G8	h	H	m1	m2	m3	n1	n2	S	D6	G9	L9	d7
04	28	150	110	270	540	193	200	400	355	/	180	112	85	19	125	140	70	30h6
05	28	160	130	315	630	217	230	460	430	/	220	113	100	19	150	160	80	40h6
06	28	160	130	350	665	217	230	490	510	/	220	113	145	19	150	160	80	40h6
07	35	210	160	385	735	255	280	560	545	/	260	131	130	24	175	195	100	45h6
08	35	210	160	430	780	255	280	580	650	/	260	131	190	24	175	195	100	45h6
09	40	260	185	450	860	298	320	640	635	/	320	156	155	28	190	230	100	55h6
10	40	260	185	500	910	298	320	670	735	/	320	156	205	28	190	230	100	55h6
11	50	210	225	545	1025	355	380	760	775	/	370	178	180	35	230	270	135	65h6
12	50	210	225	615	1095	355	380	790	930	/	370	178	265	35	230	270	135	65h6
13	60	210	250	635	1165	426	440	875	545	545	475	142	305	35	290	330	155	80h6
14	60	210	250	705	1235	426	440	940	545	685	475	137	375	35	290	330	155	80h6
15	70	210	316	762	1420	472	500	1000	655	655	535	160	365	42	310	370	160	100h6
16	70	210	320	808	1470	472	500	1035	655	745	535	160	410	42	310	370	160	100h6
17	80	230	400	860	1650	497	550	1105	735	735	600	160	390	42	310	405	160	100h6
18	80	230	400	920	1710	497	550	1110	735	855	600	160	450	42	310	405	160	100h6

Size	Output Shaft									Oil	Weight
	BE3..DS			BE3..DH		BE3..DD				BE3..	
	d2	G2	L2	D	G4	D2	D3	G5	G6	(L)	(kg)
04	80m6	140	170	80H7	140	85H7	85H7	205	140	9	246
05	100m6	165	210	95H7	165	100H7	100H7	240	165	14	390
06	110m6	165	210	105H7	165	110H7	110H7	240	165	15	445
07	120m6	195	210	115H7	195	120H7	120H7	280	195	25	652
08	130m6	195	250	125H7	195	130H7	130H7	285	195	28	737
09	140m6	235	250	135H7	235	140H7	140H7	330	235	40	1020
10	160m6	235	300	150H7	235	150H7	150H7	350	235	42	1150
11	170m6	270	300	165H7	270	165H7	165H7	400	270	66	1658
12	180m6	270	300	180H7	270	180H7	180H7	405	270	72	1933
13	200m6	335	350	190H7	335	190H7	190H7	480	335	130	2762
14	220m6	335	350	210H7	335	210H7	210H7	480	335	140	3132
15	240m6	380	410	230H7	380	230H7	230H7	550	380	210	4488
16	250m6	380	410	240H7	380	240H7	240H7	550	380	220	4713
17	260m6	415	410	250H7	415	250H7	250H7	600	415	290	5802
18	280m6	415	470	275H7	415	280H7	280H7	600	415	300	6307

BE405H-418H(With auxiliary gearmotor)

BE4..HS BE4..HH BE4..HD

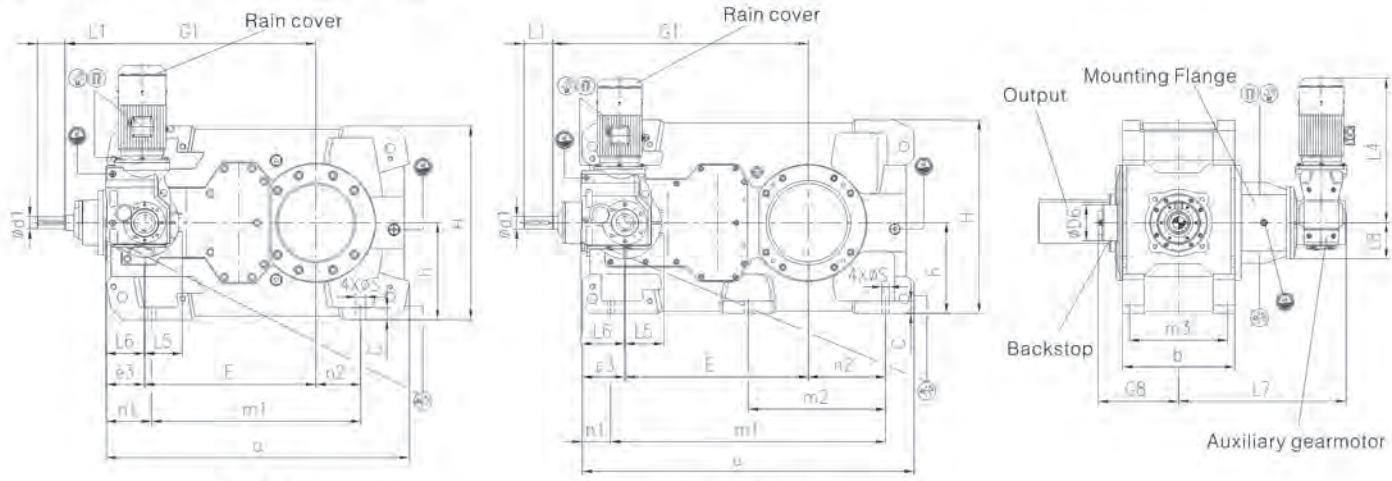

BE405H-412H BE413H-418H

Assembly Code: A		Assembly Code: C	
BE4..HS 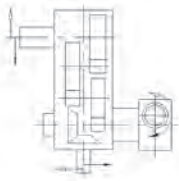	BE4..HH 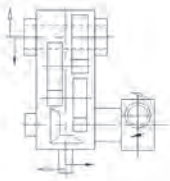	BE4..HS 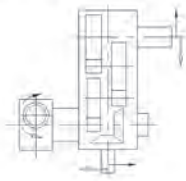	BE4..HH 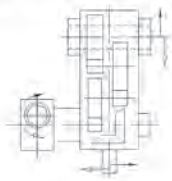
BE4..HD 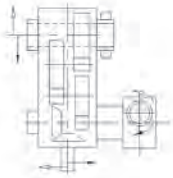		BE4..HD 	

Note:The solid arrow means that rotating direction is CW facing output shaft;
The hollow arrow means that rotating direction is CCW facing output shaft;

Output Shaft

BE4..HS Solid shaft	BE4..HH Hollow shaft	BE4..HD Hollow shaft with shrink disc
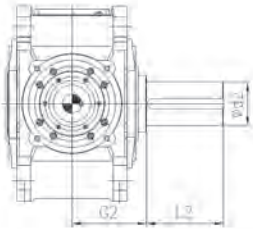	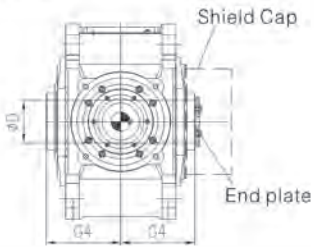	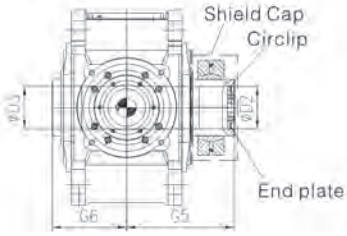

Size	Input Shaft				GearBox					
	iN≤250(Size:9,10,17) iN≥280(Size:05,06,07,08, 11,12,13,14,15,16,18)		iN≥280(Size:9,10,17) iN≥315(Size:05,06,07,08, 11,12,13,14,15,16,18)		G1	a	b	C	e3	E
	d1	L1	d1	L1						
05	35k6	80	25k6	50	615	713	255	28	90	405
06	35k6	80	25k6	50	650	793	255	28	90	440
07	35k6	80	30k6	60	725	876	300	35	110	495
08	35k6	80	30k6	60	770	981	300	35	110	540
09	45k6	110	35k6	80	840	1033	370	40	130	580
10	45k6	110	35k6	80	890	1131	370	40	130	630
11	50k6	110	40k6	80	1010	1227	430	50	160	705
12	50k6	110	40k6	80	1080	1382	430	50	160	775
13	60m6	140	50k6	110	1170	1470	550	60	207	820
14	60m6	140	50k6	110	1240	1610	550	60	207	890
15	75m6	140	60m6	140	1407	1760	625	70	250	987
16	75m6	140	60m6	140	1453	1850	625	70	250	1033
17	75m6	140	60m6	140	1455	1820	690	80	235	1035
18	75m6	140	60m6	140	1515	1940	690	80	235	1095

Size	GearBox														
	G8	h	H	m1	m2	m3	n1	n2	S	L4	L5	L6	L7	L8	D6
05	210	230	460	480	/	220	113	100	19	507	80	100	395	80	95
06	210	230	490	560	/	220	113	145	19	507	80	100	395	80	95
07	240	280	560	605	/	260	131	130	24	604	100	112	460	100	125
08	240	280	580	710	/	260	131	190	24	604	100	112	460	100	125
09	270	320	640	710	/	320	156	155	28	659	143	140	530	125	125
10	270	320	670	810	/	320	156	205	28	659	143	140	530	125	125
11	315	380	760	870	/	370	178	180	35	659	128	140	565	125	150
12	315	380	790	1025	/	370	178	265	35	659	128	140	565	125	150
13	375	440	875	1195	667.5	475	137	305	35	777	160	180	665	150	175
14	375	440	940	1335	667.5	475	137	375	35	777	160	180	665	150	175
15	465	500	1000	1440	840	535	161	365	42	866	200	212	820	175	230
16	465	500	1035	1530	840	535	160	410	42	866	200	212	820	175	230
17	495	550	1105	1500	840	600	160	390	42	942	190	212	840	175	230
18	495	550	1110	1620	840	600	160	450	42	942	190	212	840	175	230

Size	Output Shaft									Oil		Weight
	BE4.HS			BE4.HH		BE4.HD				KE	BE4..	
	d2	G2	L2	D	G4	D2	D3	G5	G6	(L)	(L)	(kg)
05	100m6	165	210	95H7	165	100H7	100H7	240	165	1.5	16	354
06	110m6	165	210	105H7	165	110H7	110H7	240	165	1.5	18	433
07	120m6	195	210	115H7	195	120H7	120H7	280	195	2.2	30	601
08	130m6	195	250	125H7	195	130H7	130H7	285	195	2.2	33	705
09	140m6	235	250	135H7	235	140H7	140H7	330	235	3.9	48	963
10	160m6	235	300	150H7	235	150H7	150H7	350	235	3.9	50	1177
11	170m6	270	300	165H7	270	165H7	165H7	400	270	3.9	80	1558
12	180m6	270	300	180H7	270	180H7	180H7	405	270	3.9	90	1819
13	200m6	335	350	190H7	335	190H7	190H7	480	335	7.7	145	2526
14	220m6	335	350	210H7	335	210H7	210H7	480	335	7.7	150	3071
15	240m6	380	410	230H7	380	230H7	230H7	550	380	13.7	230	3940
16	250m6	380	410	240H7	380	240H7	240H7	550	380	13.7	235	4450
17	260m6	415	410	250H7	415	250H7	250H7	600	415	13.7	295	4945
18	280m6	415	470	275H7	415	280H7	280H7	600	415	13.7	305	5475

BE405D-418D(Without auxiliary gearmotor)

BE4..DS BE4..DH BE4..DD

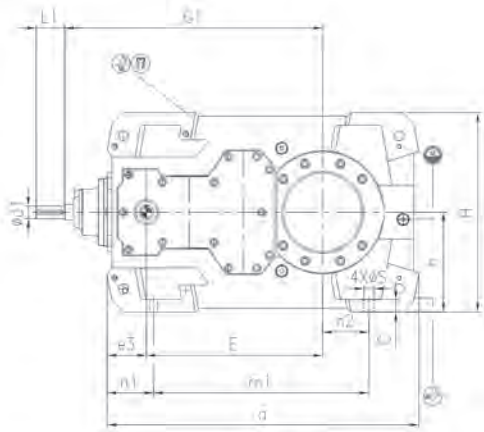

BE405D-412D

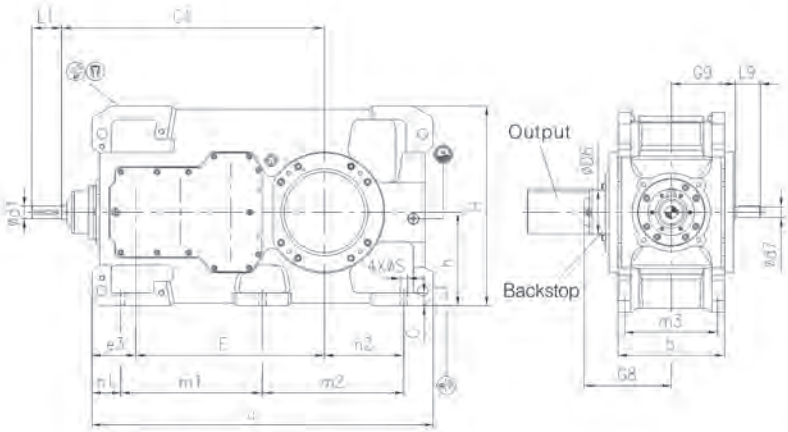

BE413D-418D

Assembly Code: A		Assembly Code: C	
BE4..DS 	BE4..DH 	BE4..DS 	BE4..DH 
BE4..DD 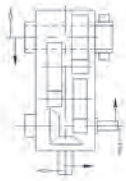		BE4..DD 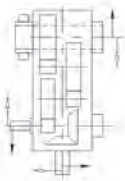	

Note:The solid arrow means that rotating direction is CW facing output shaft;
The hollow arrow means that rotating direction is CCW facing output shaft;

Output Shaft

BE4..DS
Solid shaft

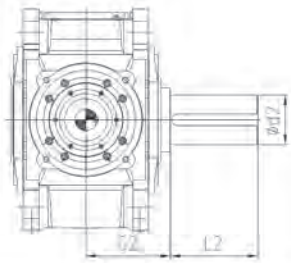

BE4..DH
Hollow shaft

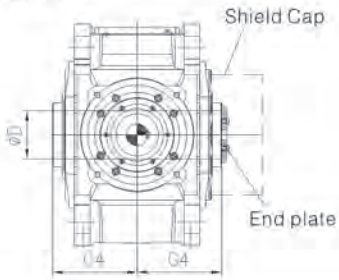

BE4..DD
Hollow shaft with shrink disc

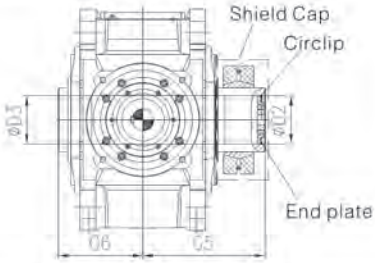

Size	Input Shaft				GearBox					
	iN≤250(Size:9,10,17) iN≥280(Size:05,06,07,08, 11,12,13,14,15,16,18)		iN≥280(Size:9,10,17) iN≥315(Size:05,06,07,08, 11,12,13,14,15,16,18)		G1	a	b	C	e3	E
	d1	L1	d1	L1						
05	35k6	80	25k6	50	615	713	255	28	90	405
06	35k6	80	25k6	50	650	793	255	28	90	440
07	35k6	80	30k6	60	725	876	300	35	110	495
08	35k6	80	30k6	60	770	981	300	35	110	540
09	45k6	110	35k6	80	840	1033	370	40	130	580
10	45k6	110	35k6	80	890	1131	370	40	130	630
11	50k6	110	40k6	80	1010	1227	430	50	160	705
12	50k6	110	40k6	80	1080	1382	430	50	160	775
13	60m6	140	50k6	110	1170	1470	550	60	207	820
14	60m6	140	50k6	110	1240	1610	550	60	207	890
15	75m6	140	60m6	140	1407	1760	625	70	250	987
16	75m6	140	60m6	140	1453	1850	625	70	250	1033
17	75m6	140	60m6	140	1455	1820	690	80	235	1035
18	75m6	140	60m6	140	1515	1940	690	80	235	1095

Size	GearBox												
	G8	h	H	m1	m2	m3	n1	n2	S	G9	L9	d7	D6
05	210	230	460	480	/	220	113	100	19	170	60	25h6	95
06	210	230	490	560	/	220	113	145	19	170	60	25h6	95
07	240	280	560	605	/	260	131	130	24	200	70	30h6	125
08	240	280	580	710	/	260	131	190	24	200	70	30h6	125
09	270	320	640	710	/	320	156	155	28	235	65	40h6	125
10	270	320	670	810	/	320	156	205	28	235	65	40h6	125
11	315	380	760	870	/	370	178	180	35	255	80	40h6	150
12	315	380	790	1025	/	370	178	265	35	255	80	40h6	150
13	375	440	875	667.5	527.5	475	137	305	35	310	100	45h6	175
14	375	440	940	667.5	667.5	475	137	375	35	310	100	45h6	175
15	465	500	1000	840	600	535	161	365	42	365	135	65h6	230
16	465	500	1035	840	690	535	160	410	42	365	135	65h6	230
17	495	550	1105	840	660	600	160	390	42	385	135	65h6	230
18	495	550	1110	840	780	600	160	450	42	385	135	65h6	230

Size	Output Shaft									Oil	Weight
	BE4..DS			BE4..DH		BE4..DD				BE4..	
	d2	G2	L2	D	G4	D2	D3	G5	G6	(L)	(kg)
05	100m6	165	210	95H7	165	100H7	100H7	240	165	16	354
06	110m6	165	210	105H7	165	110H7	110H7	240	165	18	433
07	120m6	195	210	115H7	195	120H7	120H7	280	195	30	601
08	130m6	195	250	125H7	195	130H7	130H7	285	195	33	705
09	140m6	235	250	135H7	235	140H7	140H7	330	235	48	963
10	160m6	235	300	150H7	235	150H7	150H7	350	235	50	1177
11	170m6	270	300	165H7	270	165H7	165H7	400	270	80	1558
12	180m6	270	300	180H7	270	180H7	180H7	405	270	90	1819
13	200m6	335	350	190H7	335	190H7	190H7	480	335	145	2526
14	220m6	335	350	210H7	335	210H7	210H7	480	335	150	3071
15	240m6	380	410	230H7	380	230H7	230H7	550	380	230	3940
16	250m6	380	410	240H7	380	240H7	240H7	550	380	235	4450
17	260m6	415	410	250H7	415	250H7	250H7	600	415	295	4945
18	280m6	415	470	275H7	415	280H7	280H7	600	415	305	5475

13 Suggested output connection dimensions

13.1 Hollow shaft with parallel key connection:

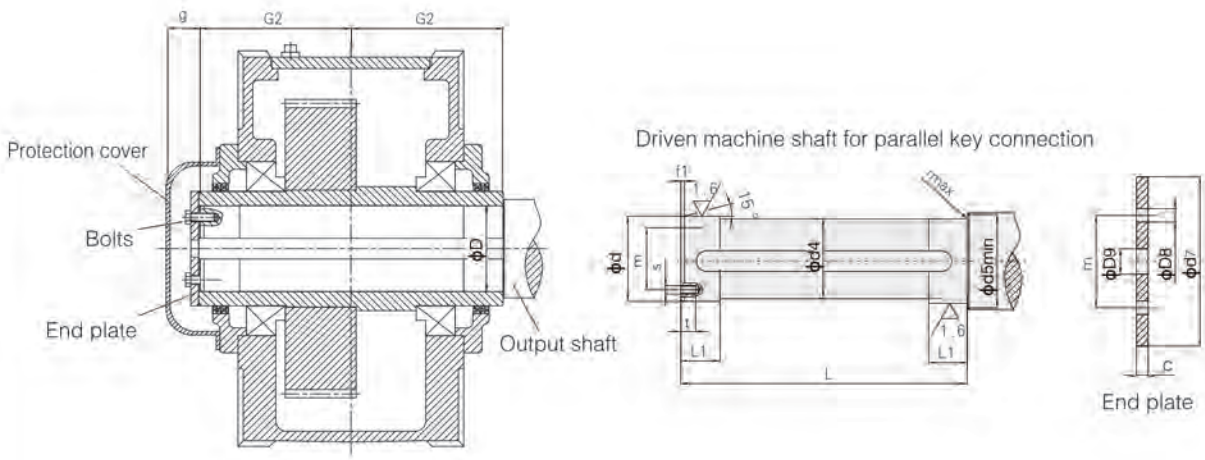

Size	Driven equipment shaft									End plate					Bolt		Hollow shaft		
	d	d4	d5	f1	L	L1	r	s	t	c	D8	D9	d7	m	Size	Qty.	D	G2	g
04	80h6	79.5	88	4	278	35	1.2	M10	18	10	11	22	100	60	M10x25	2	80H7	140	50
05	95h6	94.5	105	5	328	40	1.6	M10	18	10	11	26	120	70	M10x25	2	95H7	165	45
06	105h6	104.5	116	5	328	45	1.6	M10	18	10	11	26	120	70	M10x25	2	105H7	165	45
07	115h6	114.5	126	5	388	50	1.6	M12	20	12	13.5	26	140	80	M12x30	2	115H7	195	55
08	125h6	124.5	136	6	388	55	2.5	M12	20	12	13.5	26	150	85	M12x30	2	125H7	195	55
09	135h6	134.5	147	6	467	60	2.5	M12	20	12	13.5	33	160	90	M12x30	2	135H7	235	55
10	150h6	149.5	162	6	467	65	2.5	M12	20	12	13.5	33	185	110	M12x30	2	150H7	235	55
11	165h6	164.5	177	7	537	70	2.5	M16	28	15	17.5	33	195	120	M16x40	2	165H7	270	65
12	180h6	179.5	192	7	537	75	2.5	M16	28	15	17.5	33	220	130	M16x40	2	180H7	270	65
13	190h6	189.5	206	7	667	80	3	M16	28	18	17.5	33	230	140	M16x40	2	190H7	335	45
14	210h6	209.5	226	8	667	85	3	M16	28	18	17.5	33	250	160	M16x40	2	210H7	335	45
15	230h6	229.5	248	8	756	100	3	M20	38	25	22	39	270	180	M20x55	4	230H7	380	60
16	240h6	239.5	258	8	756	100	3	M20	38	25	22	39	280	180	M20x55	4	240H7	380	60
17	250h6	249.5	270	8	826	110	4	M20	38	25	22	39	300	190	M20x55	4	250H7	415	60
18	275h6	274.5	295	9	826	120	4	M20	38	25	22	39	330	210	M20x55	4	275H7	415	60

⚠Note: 1.Material of driven equipment shaft:40Cr or steel with higher strength.
2.Shaft and parallel key of driven equipment are not within the scope of supply. Please order if required.
3.Protection cover, end plate and bolts are supplied with gearbox as standard.

13.2 Hollow shaft for shrink Disks:

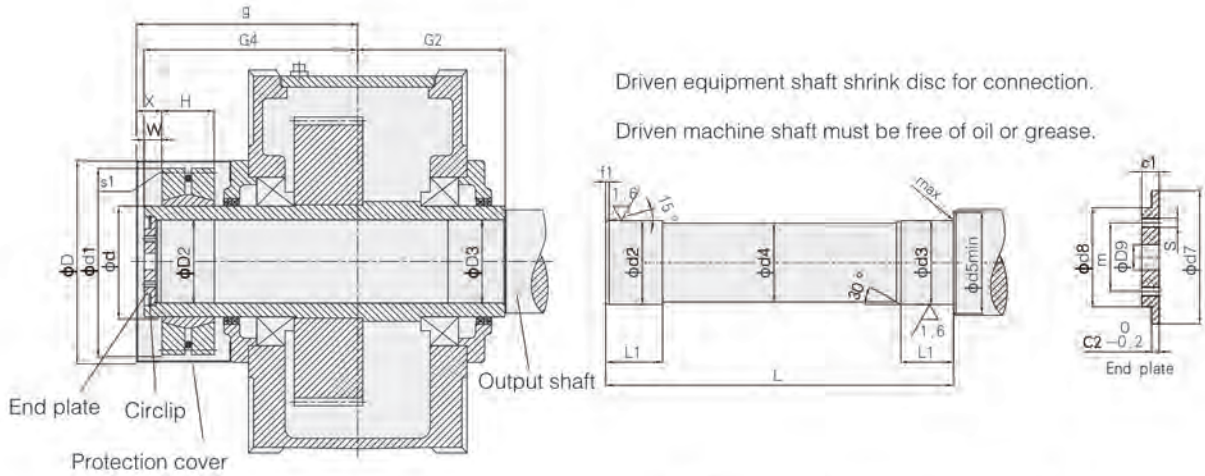

X=Space required for torque wrench

Size	Driven equipment shaft								End plate								Circlip	Hollow shaft				Shrink disc					Bolt	Protection cover	
	d2	d3	d4	d5	f1	L	L1	r	c1	c2	d7	d8	D9	m	s	Number		D2	D3	G2	G4	Type	d	d1	H	W	s1	D	g
04	85g6	85h6	84.5	95	4	326	48	2	17	7	90	70	22	50	M8	2	90	85H7	85H7	140	205	SP2-110	110	185	49	15	M12	232	233
05	100g6	100h6	99.5	114	5	383	53	2	20	8	105	80	26	55	M10	2	105	100H7	100H7	165	240	SP2-125	125	215	53	17	M12	277	260
06	110g6	110h6	109.5	124	5	383	58	3	20	8	115	85	26	60	M10	2	115	110H7	110H7	165	240	SP2-140	140	230	58	17	M12	277	261
07	120g6	120h6	119.5	134	5	453	68	3	20	8	125	90	26	65	M12	2	125	120H7	120H7	195	280	SP2-155	155	263	62	23	M12	347	321
08	130g6	130h6	129.5	145	6	458	73	3	20	8	135	100	26	70	M12	2	135	130H7	130H7	195	285	SP2-165	165	290	68	23	M16	347	320
09	140g6	140h6	139.5	160	6	539	82	4	23	10	150	110	33	80	M12	2	150	140H7	140H7	235	330	SP2-175	175	300	68	28	M16	362	390
10	150g6	150h6	149.5	170	6	559	92	4	23	10	160	120	33	90	M12	2	160	150H7	150H7	235	350	SP2-185	185	330	85	28	M16	399	398
11	165f6	165g6	164.5	185	7	644	112	4	23	10	175	130	33	90	M12	2	175	165H7	165H7	270	400	SP2-220	220	370	103	30	M16	399	455
12	180f6	180g6	179.5	200	7	649	122	4	23	10	190	140	33	100	M16	2	190	180H7	180H7	270	405	SP2-240	240	405	107	30	M20	464	477
13	190f6	190g6	189.5	213	7	789	137	5	23	10	200	150	33	110	M16	2	200	190H7	190	335	480	SP2-260	260	430	119	30	M20	500	505
14	210f6	210g6	209.5	233	8	784	147	5	28	14	220	170	33	130	M16	2	220	210H7	210	335	480	SP2-280	280	460	132	30	M20	525	505
15	230f6	230g6	229.5	253	8	899	157	5	28	14	240	180	39	140	M16	2	240	230H7	230	380	550	SP2-300	300	485	140	35	M20	575	575
16	240f6	240g6	239.5	263	8	899	157	5	28	14	250	190	39	150	M20	2	250	240H7	240	380	550	SP2-320	320	520	140	35	M20	595	575
17	250f6	250g6	249.5	278	8	982	177	5	30	14	265	200	39	150	M20	2	265	250H7	250	415	600	SP2-340	340	570	155	35	M20	615	630
18	280f6	280g6	279.5	306	9	982	177	5	30	14	290	210	39	160	M20	2	290	280H7	280	415	600	SP2-360	360	590	162	35	M24	635	625

⚠ Note: 1.Material of driven equipment shaft:40Cr or steel with higher strength.
2.Shaft and parallel key of driven equipment are not within the scope of supply. Please order if required.
3.Protection cover, end plate and bolts are supplied with gearbox as standard.

14 Dimension of Parallel Key and Keyway

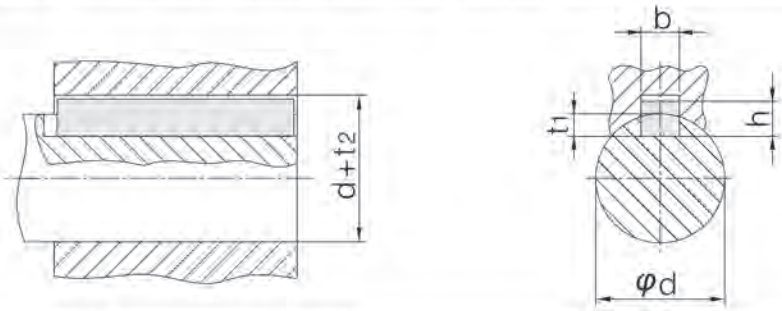

d	b	h	t_1	$d+t_2$
8 < d ≤ 10	3	3	1.8	d + 1.4
10 < d ≤ 12	4	4	2.5	d + 1.8
12 < d ≤ 17	5	5	3	d + 2.3
17 < d ≤ 22	6	6	3.5	d + 2.8
22 < d ≤ 30	8	7	4	d + 3.3
30 < d ≤ 38	10	8	5	d + 3.3
38 < d ≤ 44	12	8	5	d + 3.3
44 < d ≤ 50	14	9	5.5	d + 3.8
50 < d ≤ 58	16	10	6	d + 4.3
58 < d ≤ 65	18	11	7	d + 4.4
65 < d ≤ 75	20	12	7.5	d + 4.9
75 < d ≤ 85	22	14	9	d + 5.4
85 < d ≤ 95	25	14	9	d + 5.4
95 < d ≤ 110	28	16	10	d + 6.4
110 < d ≤ 130	32	18	11	d + 7.4
130 < d ≤ 150	36	20	12	d + 8.4
150 < d ≤ 170	40	22	13	d + 9.4
170 < d ≤ 200	45	25	15	d +10.4
200 < d ≤ 230	50	28	17	d +11.4
230 < d ≤ 260	56	32	20	d +12.4
260 < d ≤ 290	63	32	20	d +12.4
290 < d ≤ 330	70	36	22	d +14.4
330 < d ≤ 380	80	40	25	d +15.4
380 < d ≤ 440	90	45	28	d +17.4
440 < d ≤ 500	100	50	31	d +19.5
500 < d ≤ 560	110	56	34.3	d +22.2
560 < d ≤ 640	120	63	39	d +24.5

15 Shaft End Centre Hole

15.1 Shaft end C type screw central hole:

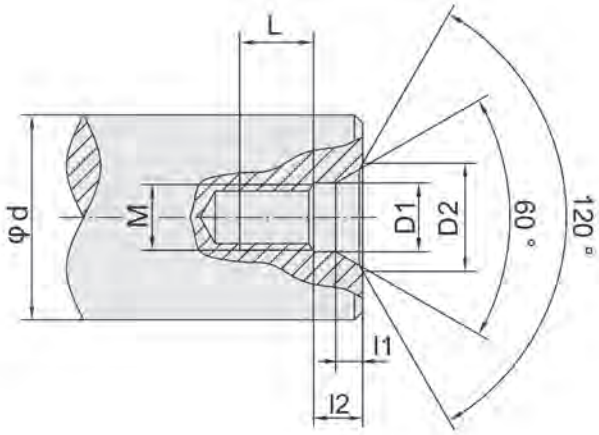

d	M	L	l2	l1	D1	D2
7 < d ≤ 10	M3	10	2.6	1.8	3.2	5.8
10 < d ≤ 13	M4	10	3.2	2.1	4.3	7.4
13 < d ≤ 16	M5	10	4	2.4	5.3	8.8
16 < d ≤ 21	M6	12	5	2.8	6.4	10.5
21 < d ≤ 24	M8	12	6	3.3	8.4	13.2
24 < d ≤ 30	M10	15	7.5	3.8	10.5	16.3
30 < d ≤ 38	M12	20	9.5	4.4	13	19.8
38 < d ≤ 50	M16	25	12	5.2	17	25.3
50 < d ≤ 85	M20	30	15	6.4	21	31.3
85 < d ≤ 130	M24	35	18	8	25	38
130 < d ≤ 225	M30	45	18	11	31	48

16 Lubrication oil (heavy-loading industrial gear oil) viscosity number selection[VG320(Accessory code:UV32);VG460(Accessory code:UV46)]

Ambient temperature℃	-20℃~+40℃	+30℃~+50℃
Viscosity number	VG320	VG460

⚠ Note: 1.Viscosity in the above table is ISO-VG Viscosity under 40 ℃
2.When ambient temperature is lower than-10℃,synthetic oil must be used.
3.To ensure product lifespan, we suggest synthetic oil.
4.IF ambient temperature exceeds the above range, please consult.

BONENG TRANSMISSION(SUZHOU)CO.,LTD.-North-East Territory

SHENGYANG 110013
1423, Tang Xuan Center, 12-1
North Second East Road, Tiexi District
TEL:024-31281850

DALIAN 116021
Room 1309, Block A, Zhongnan Building,
No. 18 Zhonghua West Road, Ganjingzi District
TEL:0411-39728495

CHANGCHUN 130041
Room 2206, 22nd Floor, Jianshe Building,
Guiyang Street, Changchun City
TEL:0431-88018012

HAERBIN 150001
Room 1208, Building A, Zhonghao Wall Street,
No. 209, Changjiang Road, Nangang District
TEL:0451-53635817

BONENG TRANSMISSION(TIANJIN)CO.,LTD.

BEIJING 100176
1007, Building 10, Lippo Plaza, 8 Ronghua Middle Road,
Daxing District, Beijing
TEL:010-82844108

TIANJIN 300021
No. 6 Shuanghai Road, Beichen District
TEL:022-27252801

TANGSHAN 063000
16th Floor, Tangshan Technology Center,
1698 Weiguo Road, High-tech Development Zone
TEL:0315-3476336

SHIJIAZHUANG 050011
Room 403, Block B, Zhong Yuan Business Building,
88 Huaian West Road, Qiaoxi District
TEL:0311-68120930

CHANGZHI 046000
Room A04, Zhongchuang Society (Building Space),
No. 188 Taihang North Road, High-tech Zone, Changzhi City
TEL:0355-6081808

TAIYUAN 030006
Wanbang International 2310,
No. 7 Yingze Street, Yingze District
TEL:0351-7425539

BAOTOU 014010
Room 1713, Financial Fortune Building,Frindship Street
and Fuqiang Road, Qingshan District, Baotou City
TEL:0472-5908677

BAODING 071000
Room 2308, Building 2, Future Stone,
No. 1999, Qiyi East Road, Lianchi District
TEL:0312-6770052

BONENG TRANSMISSION(CHANGSHA)CO.,LTD.

CHANGSHA 410205
1288 Puri Avenue,Wangcheng Economic Development Zone
TEL:0731-88382129

GUANGZHOU 510630
1511, Building 11, Weizhou New Village,
Xingang East Road, Haizhu District
TEL:020-38372340

LIUZHOU 545000
14-2 Ruitai Building, No. 21, Longcheng Road,
Chengzhong District
TEL:0772-2998596

SHENZHEN 518101
Room 1129, Nobel Plaza, No. 269, Qianjin 1st Road,
Xin'an Street, Baoan District
TEL:0755-82305500

GUIYANG 550002
No. 1 Huaguoyuan Street, Nanming District, Guiyang City
TEL:0851-8587733

KUNMING 650021
Room 1611, Building 6, Phase 2,Luosiwan international
Trade City Panlong District, Kunming City.
TEL:0871-63627910

QUANZHOU 362000
Rm.1913, Quanzhou Puxi Wanda SOHO B,
Baozhou Road,Fengze District, Quanzhou City.
TEL:0595-22518045

NANCHANG 330003
Room 1321, Building 2, Ligaolanhu, 220 Lian'an Road,
Xiaolan Economic and Technological Development Zone, Nanchang
TEL:0791-86662106

BONENG TRANSMISSION(WEIFANG)CO.,LTD.

QINGDAO 266012
Room 5018, Yigao Digital Plaza, No. 157,
Liaoning Road, Shibei District
TEL:0532-55579476

WEIFANG 261000
Room 1911, Block F, Century Taihua,
360 Dongfeng East Street
TEL:0536-8235189

JINING 272000
1210, Wanli Fude Plaza,
Yangqiao Triangle Greenland, High-tech Zone
TEL:0537-7972321

JINAN 250031
Room 1607, Greenland City,
2477 Qizhou Road, Huaiyin District
TEL:0531-85899337

YANTAI 264000
Room 688, East Building, Baowei Building, No. 5
Wanshoushan Road, Development Zone, Yantai City
TEL:0535-6972372

BONENG TRANSMISSION(KAIFENG)CO.,LTD.

KAIFENG 475000
No. 5, Haishen Machinery, No. 11 Fourth Street,
West Section of Songcheng Road, New District
TEL:0371-23335225

ZHENGZHOU 450000
Room 2619, No. 11, Business Outer Ring Road,
Zhengdong New District
TEL:0371-66291501

CHONGQING 400039
27-12, Building 1, No. 8, Xihuan Road, Jiangbei District
TEL:023-68856736

WUHAN 430077
No. 13-2304, Wanda Plaza, Jiyu Bridge,
Heping Avenue, Wuchang District
TEL:027-87253387

CHENGDU 610031
Room 3105, 31st Floor, Building 1,No.666,
Jinfu Road, Jinfu District
TEL:028-87741100

Distributors for Australia & New Zealand

MOTION TECHNOLOGIES PTY LIMITED

24/22-30 Northumberland Road
Caringbah NSW 2229 Australia
Phone: (02) 9524 4782

sales@motiontech.com.au
www.motiontech.com.au

BONENG

BONENG TRANSMISSION (SUZHOU) CO.,LTD
100#，Ruyuan Rd.,Xiangcheng District,Suzhou,China
www.boneng.com

BONENG